SILICON CHIP

NOVEMBER 2016
ISSN 1030-2662
11
9 771030 266001
PP255003/01272
$9.95* INC GST NZ$12.90 INC GST

One for the GREY NOMADS!

Build our charger controller:

CHARGE YOUR BATTERIES SAFELY IN A FRACTION OF THE NORMAL TIME!

Raspberry Pi + WiFi + Smartphone =

- Remote control
- Remote surveillance
- Remote monitoring
- Remote . . . anything!

WE SHOW YOU HOW TO DO IT

WHAT IS THE IoT INTERNET OF THINGS?

Jaycar Electronics
Better, More Technical

duinotech

PROJECT OF THE MONTH

Our very own specialist's are developing fun and challenging Arduino®-compatible projects for you to build every month, with special prices exclusive to Nerd Perks Club Members.

Wi-Fi ENVIRONMENTAL DATALOGGER

Another handy Arduino based tool to add to your workbench. The Environmental Datalogger measures temperature, humidity and light levels and logs it to an SD card with the time of the reading. The data is saved as a .csv file, opening straight into an Excel spreadsheet, for easy graphing and analysis. It also hosts a minimal web-server, allowing the log files to be downloaded over Wi-Fi. You can customise it to measure and log other data, turn it into a weather station, see how your home-brew beverage is going (how we use it), or add GPS to create a tracker. No doubt, you will agree, it's a really handy project!

DIY

MORE INFO ONLINE

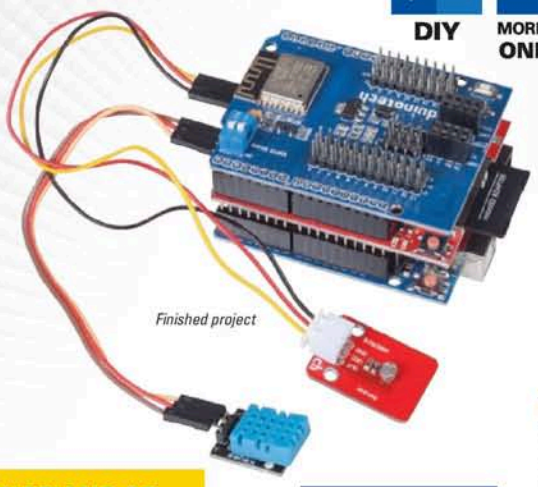

Finished project

XC-4410

XC-4614

XC-4536

XC-4998

XC-4520

XC-4446

WC-6026

HM-3211

WHAT YOU WILL NEED: VALUED AT $119.50

WIFI SHIELD	XC-4614	$34.95
UNO MAIN BOARD	XC-4410	$29.95
DATALOGGING SHIELD	XC-4536	$19.95
2GB MICRO SD CARD WITH SD CARD ADAPTOR	XC-4998	$11.95
TEMPERATURE AND HUMIDITY SENSOR MODULE	XC-4520	$9.95
PHOTOSENSITIVE LDR MODULE	XC-4446	$5.95
SOCKET-SOCKET JUMPER LEADS	WC-6026	$5.95
HEADER TERMINAL STRIP	HM-3211	85¢

SEE STEP-BY-STEP INSTRUCTIONS AT jaycar.com.au/wifi-datalogger

NERD PERKS CLUB OFFER
BUY ALL FOR $89.95
SAVE OVER 24%

ADD THESE TO CUSTOMISE IT

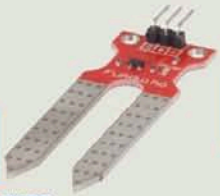

$4.95

SOIL MOISTURE SENSOR MODULE

ARDUINO® COMPATIBLE XC-4604

Automate your garden with Arduino® and use this module to detect when your plants need watering.

- Analog output
- Measures 20mm x 60mm

$9.95

ALCOHOL SENSOR MODULE

ARDUINO® COMPATIBLE XC-4540

Detect alcohol, smoke and other volatile substances. Check for gas leaks, use it as a smoke detector, or even track how your home brew is going.

- Adjustable sensitivity
- 50(L) x 20(W) x 13(H)mm

See more sensor modules in-store or online.

NERD PERKS CLUB MEMBERS RECEIVE:
10% OFF ALL SOLDER ROLLS*
*Applies only to solder listed on page 7 of the Jaycar Test, Measure & Make November 2016 flyer.

PROTECT YOUR PROJECT

IP65 SEALED ABS ENCLOSURES

Designed to IP65 of IEC529 and NEMS 4

- Internal guide slots for mounting PCB assemblies vertically

64 X 58 X 35MM	HB-6120	$5.95
115 X 65 X 55MM	HB-6124	$9.95
171 X 121 X 55MM	HB-6128	$17.95
222 X 146 X 75MM	HB-6132	$28.95
240 X 160 X 90MM	HB-6134	$37.95

Full range available in-store or online.

FROM $5.95

Flanged versions also available.

EARN A POINT FOR EVERY DOLLAR SPENT AT ANY JAYCAR COMPANY STORE* & BE REWARDED WITH A $25 JAYCOINS GIFT CARD ONCE YOU REACH 500 POINTS!
*Conditions apply. See website for T&Cs

REGISTER ONLINE TODAY BY VISITING:
www.jaycar.com.au/nerdperks

Contents

SILICON CHIP
Vol.29, No.11; November 2016 www.siliconchip.com.au

Features

16 Airbags: Your Car's Explosive Guardian Angels
Most new cars sold in Australia have six or more airbags, ready to explode into action if a crash is detected. Here's a look at how they were developed and how they work – by Dr David Maddison

26 What Is The Internet Of Things (IoT)?
Ask most people what is meant by "The Internet of Things" or IoT and you'll get a blank look. It's the same with "LoRa". So what do these terms mean and why are they becoming increasingly important? – by Ross Tester

58 Micromite Plus Advanced Programming
The Micromite Plus has important new programming features such as SD card support and a graphical user interface application library, making it easier than ever to develop an interactive touchscreen control panel – by Geoff Graham

88 Review: Siglent SDS2104 4x100MHz Mixed Signal Scope
Siglent's SDS2104 mixed-signal oscilloscope isn't their newest but with optional extras now included free of charge, it's great value for money – by Jim Rowe

Projects To Build

32 50A Battery Charger Controller
If you have an RV, caravan or campervan, you'll be well aware of the problems when it comes to charging your 12/24V batteries. This charger controller will allow you to charge them in a fraction of the normal time – by John Clarke

46 Passive Line To Phono Input Converter
Need additional line inputs on an amplifier or mixer? This passive converter circuit lets you use the phono inputs normally reserved for a turntable as a pair of line-level inputs – by Nicholas Vinen & Bao Smith

64 Micromite Plus LCD BackPack
This new version runs 2.5 times faster than the original. It also has more RAM, more flash memory, on-board SD and microSD card and USB interfaces, and mounts on the back of a 2.8-inch touchscreen LCD – by Nicholas Vinen

74 WiFi Switch Control Using A Raspberry Pi & Smartphone
Check your garage doors via a web browser by installing a WiFi camera, then bake your Raspberry Pi with a smartphone and a relay board to open or close the doors remotely – by Greg Swain & Nicholas Vinen

Special Columns

40 Serviceman's Log
Odd happenings in my new house – by Dave Thompson

82 Circuit Notebook
(1) Simple Split Supply Generator; (2) Precision Switched Capacitor DAC Needs No Precision Components; (3) PICAXE-Based Data Logger

94 Vintage Radio
The incredible shrinking mantel set: GE's T2105 – by Ian Batty

Departments

2 Publisher's Letter
6 Mailbag
57 Product Showcase
80 SC Online Shop
98 Ask Silicon Chip
103 Market Centre
104 Advertising Index
104 Notes & Errata

50A Battery Charger Controller – Page 32.

Passive Line To Phono Input Converter – Page 46.

Micromite Plus LCD BackPack – Page 64.

Using Your Raspberry Pi With A Smartphone As A WiFi-Controlled Switch – Page 74

Note: due to space restrictions, Pt.2 of the Touchscreen Voltage/Current Reference has been held over until next month.

SILICON CHIP
www.siliconchip.com.au

Publisher & Editor-in-Chief
Leo Simpson, B.Bus., FAICD

Production Manager
Greg Swain, B.Sc. (Hons.)

Technical Editor
John Clarke, B.E.(Elec.)

Technical Staff
Ross Tester
Jim Rowe, B.A., B.Sc
Nicholas Vinen
Bao Smith, B.Sc

Photography
Ross Tester

Reader Services
Ann Morris

Advertising Enquiries
Glyn Smith
Phone (02) 9939 3295
Mobile 0431 792 293
glyn@siliconchip.com.au

Regular Contributors
Brendan Akhurst
David Maddison B.App.Sc. (Hons 1), PhD, Grad.Dip.Entr.Innov.
Kevin Poulter
Dave Thompson

SILICON CHIP is published 12 times a year by Silicon Chip Publications Pty Ltd. ACN 003 205 490. ABN 49 003 205 490. All material is copyright ©. No part of this publication may be reproduced without the written consent of the publisher.

Printing: Offset Alpine, Lidcombe, NSW.

Distribution: Network Distribution Company.

Subscription rates: $105.00 per year in Australia. For overseas rates, see our website or the subscriptions page in this issue.

Editorial office:
Unit 1, 234 Harbord Rd, Brookvale, NSW 2100.
Postal address: PO Box 139, Collaroy Beach, NSW 2097.
Phone (02) 9939 3295.
E-mail: silicon@siliconchip.com.au

ISSN 1030-2662
Recommended & maximum price only.

Publisher's Letter

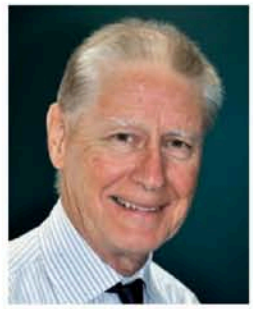

Renewable energy is seriously damaging the Australian economy

No doubt most readers know about the state-wide blackout that occurred in South Australia in September. Let me summarise what happened. It seems that the wind blew just a bit too hard for their much-vaunted wind turbines and they all automatically feathered their blades to stop self-destruction. Up to that point, the wind turbines had been pumping out power at a huge rate and their sudden throwing in the towel meant that the power shortfall had to come from somewhere else. Since South Australia no longer has proper base-load power stations, it had to come from Victoria via the fabled "interconnector". But the load was too much for it and it suddenly became the "disconnector". Everything else fell in a heap after that.

Of course, after the blackout occurred, a bunch of their spindly transmission towers then blew over and that did not make the job of restoring power any easier. It is only now that people are starting to realise that you actually need a powered grid to allow wind farms to generate power. They cannot simply start up on their own! In that way, they are exactly like the tens of thousands of grid-tied solar systems installed right throughout Australia. As their owners are painfully aware, if you have a blackout, your shiny solar panels and inverters are prevented from generating power by the "anti-islanding" feature.

Actually, given the serious difficulties involved, it is incredible just how quickly the energy distributors managed to reconnect power to most of the population. But it could all happen again, any time the wind blows at more than about 90km/h, which is not much more than a stiff gale.

So I wonder if many people died in their home during that blackout because their life support system stopped? How many hundreds of millions of dollars of production were lost? When you take into account the serious disruption to blast furnaces at Whyalla and Port Pirie and the interruption to production at mines at Olympic Dam and elsewhere, it might run to a lot more.

This problem of the intermittency of wind and solar power and the need for expensive backup generation has been well-documented in the past. In fact, not only do South Australian electricity consumers pay the highest rates in the country, the cost for their peak power (when the wind stops) has risen as high as $14000 per megawatt! And while the South Australian government politicians like to boast that their state has the highest proportion of power generated by renewables, ultimately they rely on Victoria's dirty brown coal power stations in the Latrobe Valley, via the interconnector/disconnector. How much longer can that happen, since Victoria seems to be heading down the same "renewable" energy dead end?

Finally, just in case anyone thinks that South Australia was subjected to a really severe weather event, just consider that when Cyclone Yasi hit Queensland in 2011, it did not black out the whole state – far from it. Even during that severe event, the disruption to the State's grid was relatively modest. And more recently, consider Cyclone Matthew which just ravaged Haiti, Florida and some of the southern United States. Florida was not "blacked out" although about 2.2 million homes and business were blacked out for a short period.

I am actually optimistic about the outcome of this South Australian calamity. It should make all Australians aware that this religious crusade to produce more and more renewable energy will not just cost all taxpayers and electricity consumers lots of money if we keep going as we are. It will mean loss of employment to untold thousands of people as businesses realise that Australia is not a good place to operate. Let us hope that sanity will be restored.

Leo Simpson

One Source For Your Design Challenges!

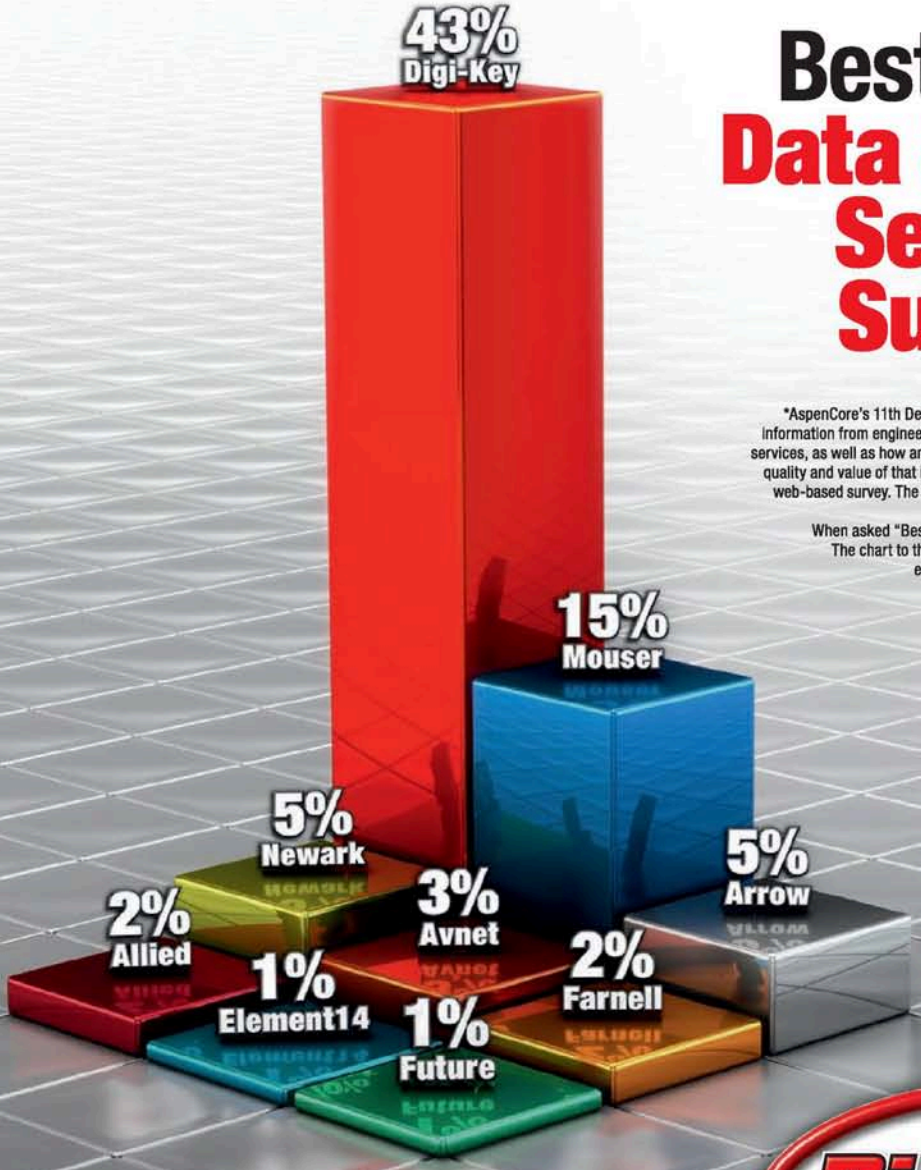

Best in Class: Data & Product Selection Support?*

*AspenCore's 11th Design Engineer and Supplier Interface Study gathered information from engineers regarding their need for product information and other services, as well as how and when they interface with suppliers and how they see the quality and value of that interface. 1,750 U.S. engineers participated in this year's web-based survey. The results represent those surveys completed by April 2016.

When asked "Best in Class for Data & Product Selection Support?" The chart to the left shows the results among the industry's electronic component distributors.

AspenCore

AUSTRALIA
DIGIKEY.COM.AU
1800 285 719

NEW ZEALAND
DIGIKEY.CO.NZ
800 449 837

Digi-Key® ELECTRONICS

5 MILLION PARTS ONLINE | 650+ INDUSTRY-LEADING SUPPLIERS | 100% AUTHORIZED DISTRIBUTOR

All orders are shipped via UPS for delivery within 3-4 days (dependent on final destination). No handling fees. **Australia: Free shipping on orders over $200 AUD. All prices are in Australian dollar. **New Zealand:** Free shipping on orders over NZ$125. All prices are in New Zealand dollar. If excessive weight or unique circumstances require deviation from this charge, customers will be contacted prior to shipping order. Digi-Key is an authorized distributor for all supplier partners. New product added daily. © 2016 Digi-Key Electronics, 701 Brooks Ave. South, Thief River Falls, MN 56701, USA

ecia MEMBER ecsn member CEDIA

HARE&FORBES MACHINERYHOUSE

"Setting the standard for Quality & Value"

A family owned Australian business
Established 1930

Metal Working | Sheet Metal Fabrication | Wood Working | Cutting Tools | Machine Tool Accessories

HSS Countersink Set

- HSS M2 Bright Finish
- Range: Ø2 - Ø20mm
- Angle 45°

$66 ~~$78.65~~ (D1051)

Sheet Metal Step Drill Set

- HSS M2 bright finish
- For drilling holes in thin material
- Sizes: 4-12mm x 1mm, 6-20mm x 2mm, 6-30mm x 2mm

$77 ~~$90.75~~ (D1071)

Precision Jobber Drill Set

- Precision ground flutes
- HSS M2 bright finish
- 25 Piece Metric
- Range: 1-13mm
- 0.5mm increments

$91 ~~$107.80~~ (D1272)

Precision Jobber Drill Set

- Precision ground flutes
- HSS M2 bright finish
- 29 Piece Imperial
- Range: 1/16 - 1/2"
- 1/64" increments

$97 ~~$114.95~~ (D1282)

HSS Industrial Centre Drill Set

- 5 piece set
- No. 1, 2, 3, 4, 5
- HSS M2 bright finish
- Industrial quality

$39 ~~$47.30~~ (D508)

HSS Industrial Slot Drill Set - Metric

- 5 piece set
- 6, 8, 10, 12, 16mm
- Manufactured from HSS M35 5% Co bright finish screwed shank
- Two flute

$90 ~~$107.80~~ (M3351)

HSS Industrial End Mill Set - Metric

- 5 piece set
- 6, 8, 10, 12, 16mm
- Manufactured from HSS M35 5% Co bright finish screwed shank
- Four flute

$90 ~~$107.80~~ (M3352)

Metric Industrial End Mill Set

- 4 piece set
- 6, 8, 10, 12mm
- Manufactured from micro fine solid carbide
- Bright Finish
- Plain Shank

$175 ~~$204.60~~ (M337)

HSS Jobber Drill Set

- HSS precision ground flutes
- Ø1.0–Ø10mm in 0.5mm increments
- 10 drills per size up to 8mm then 5 per size

$206 ~~$228.80~~ (D126)

Hole Saw Set General Set

- M42 Bi-Metal high speed steel
- 19, 22, 25, 32, 35, 38, 44, 51, 57, 64, 76mm
- Includes 3/8" & 1/2" arbor shank & pilot drill

$112 ~~$132~~ (D102)

Metric & Imperial Drill Gauge

- Stainless steel
- 1 - 13mm
- 1/16 - 1/2"

$15 ~~$18.15~~ (M988)

EDBD-13 Drill Sharpener

- 3-13mm or 1/8"-1/2"
- CBN grinding wheel
- Split point
- 80W, 240V motor

$99 ~~$119.90~~ (D070)

CALL INTO OUR SHOWROOM FOR PROFESSIONAL ADVICE ON HAFCO TOOLS & EQUIPMENT

- CEYLAN
Staff Member

Tap and Die Set Alloy Steel

- Metric fine & coarse set
- M6 - M24 thread range
- Includes die holder & 2 x tap wrenches

$153 ~~$180.40~~ (T014)

Tap and Die Set Alloy Steel

- Imperial fine & coarse set
- 1/4"-1" thread range
- Includes die holder & 2 x tap wrenches

$153 ~~$180.40~~ (T015)

Tap and Die Set

- 21 Taps coarse threads
- M3x0.5, M4x0.7, M5x0.8, M6x1.0, M8x1.25, M10x1.5, M12x1.75
- 7 Dies x 1"

$132 ~~$156.20~~ (T013)

AC-60 - 90 degree Angle Vice Clamp

- 60mm jaw opening
- 35mm jaw height
- Cast iron clamp
- Self aligning clamp

$79 ~~$93.50~~ (V099)

Compound Drill Vice

- 105mm jaw width
- 0.1mm graduation on dials
- Ground vice jaws
- Adjustable slides

$115 ~~$132~~ (V1204)

Compound Drill Vice

- 125mm jaw width
- 0.1mm graduation on dials
- Ground vice jaws
- Adjustable slides

$179 ~~$204.60~~ (V1205)

UNIQUE PROMO CODE

SC2710

ONLINE OR INSTORE!

BECOME A MACHINERYHOUSE MATE
www.machineryhouse.com.au/signup

- ✓ PAPERLESS WARRANTY
- ✓ TRACK YOUR ORDERS
- ✓ EXCLUSIVE OFFERS
- ✓ LATEST RELEASES
- ✓ ONLINE PROMOS
- ✓ CLICK & COLLECT
- ✓ COMPETITIONS
- ✓ NEWSLETTERS

$70 FREE DISCOUNT VOUCHERS

VIEW AND PURCHASE THESE ITEMS ONLINE AT
www.machineryhouse.com.au/SC2710

THE INDUSTRY'S CHOICE!

Measuring Equipment | Workshop & Automotive | Lifting Handling | School & Tafe Equipment | Spare Parts

HL-36FF Fluorescent Work Light

- 36 Watts, 240V
- Double lamp tubes
- Head swivels 310° & tilts 210°
- Dust proof light head

$163 ~~$192.50~~ (L2825)

HL-22FR Fluorescent Work Light

- 22W fluorescent tube
- Swivel & pivoting arm
- Includes magnified lens
- 240V / 10amp

$154 ~~$181.50~~ (L282)

Flexible Coolant Hose

- 3/8" hose
- 360mm hose length
- 3/8" BSP valve kit

$23 ~~$26.40~~ (H166)

Flexible Coolant Hose

- 1/4" hose
- 330mm hose length
- With Magnetic Base

$33 ~~$38.50~~ (H170)

Keyway Broach Set - Metric

- 4, 5, 6, 8mm
- Manufactured from HSS
- Includes broaches, brushed & packing shims

$469 ~~$544.50~~ (M498)

Steel Rules

SIZE		
150mm	$6	~~$7.15~~ (Q620)
300mm	$13	~~$15.95~~ (Q621)
600mm	$19	~~$23.10~~ (Q622)

MH-826 8M Tape Measure

- 8 Metre
- 25mm width
- Belt clip on side

$10 ~~$12.10~~ (M750)

9" - Drill Press Locking Clamp

- 2" jaw opening
- Swivelling jaw pad
- Quick release lever

$20 ~~$24.20~~ (C103)

Drill Chuck Arbors

- Short taper JT3
- Suits 16mm chuck size
- Precision ground and tanged

Long Taper		
2MT	$15	~~$17.05~~ (D442A)
3MT	$19	~~$22.00~~ (D443A)
4MT	$26	~~$30.25~~ (D454A)

Heavy Duty Drill Chucks

- Robust design
- Supplied with chuck key

Capacity		
0.5 - 13mm	$51	~~$59.40~~ (C289)
0.5 - 16mm	$69	~~$82.50~~ (C290)

Heavy Duty Drill Chucks

- Industrial heavy duty keyless drill chucks
- Knurled grips
- Superior gripping
- Precision manufactured

Capacity		
0.3 - 13mm	$94	~~$108.90~~ (C292)
3 - 16mm	$115	~~$133.10~~ (C294)

K2-MT2 - Reversible Tapping Chuck

- Manufactured in Taiwan
- Tapping range: M5 - M10
- Suits drilling & milling machines

$155 ~~$181.50~~ (T002)

Calipers

- Hardened spring & legs
- Polished finish

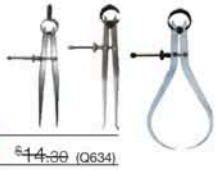

Type		
Divider	$12	~~$14.30~~ (Q634)
Inside	$12	~~$14.30~~ (Q635)
Outside	$12	~~$14.30~~ (Q636)

Boring Bar Set

- 9 piece set
- 12mm
- Suits Boring Head (M182)
- Carbide tipped boring bar

$66 ~~$78.65~~ (M180)

CHP-60 - Hydraulic Chassis Punch Set

- 1.6mm sheet capacity
- Includes 22.5, 28.3, 34.6, 43.2, 49.6, & 61.5mm dies

$279 ~~$302.50~~ (P020)

70-616 Feeler Gauge

- 0.03 - 1.0mm range
- High grade tool steel
- Hardened tempered & polished

$16 ~~$19.25~~ (Q616)

4 Piece Measuring Kit

- 0 - 25mm Micrometer
- 150mm / 6" Rule
- 150mm / 6" Vernier
- 100 x 70mm Square

$46 ~~$54.45~~ (M012)

Digital Caliper

- 150mm / 6"
- Metric, inch & fraction
- 4-way measuring
- Includes battery

$32 ~~$38.50~~ (M738)

WHG-6 Digital Height Gauge

- Horizontal and vertical measuring capable
- Digital reading in mm, inches and fractions
- 0 - 150mm measuring range
- Includes battery

$36 ~~$42.35~~ (W643)

WHG-3U Mini Digital Height Gauge

- Ideal for saw blades & routers
- Metric, inches and fractions
- 0 ~ 80mm measuring range
- Auto shut-off - 3 minutes
- Magnetic base

$29 ~~$35.20~~ (W644)

SYDNEY
(02) 9890 9111
1/2 Windsor Rd, Northmead

BRISBANE
(07) 3274 4222
625 Boundary Rd, Coopers Plains

MELBOURNE
(03) 9212 4422
1 Fowler Rd, Dandenong

PERTH
(08) 9373 9999
11 Valentine Street, Kewdale

Specifications & Prices are subject to change without notification. All prices include GST and valid until 30-11-16

10_SC_DPS_271016

MAILBAG

Letters and emails should contain complete name, address and daytime phone number. Letters to the Editor are submitted on the condition that Silicon Chip Publications Pty Ltd may edit and has the right to reproduce in electronic form and communicate these letters. This also applies to submissions to "Ask SILICON CHIP", "Circuit Notebook" and "Serviceman".

Design flaw in Ultrasonic Anti-fouling circuit

I worked at Electronics Australia in the early 1980s with Leo Simpson and the rest of the team. Recently, when looking through the September 2016 issue of SILICON CHIP, I saw that a reader had written in with an Ultrasonic Anti-Fouling unit (SILICON CHIP, September & November 2010) blowing fuses. I was asked to troubleshoot a Jaycar kit of this project some time ago with an identical problem and discovered a design flaw.

After checking the assembly of the kit I powered up the first part of the circuit (5V supply and micro) and found it worked as per the article. I then powered up the second part (Mosfets) from a second (current limited) supply and found this worked as well. I then removed the second supply, fitted a fuse, and powered the entire project from a 12V, 3A limited supply. At turn-on the unit tried to draw a large current and would have blown the fuse if not for the current limiting.

After some investigation the cause became clear. At power-up the voltage at both Mosfet gates rose to almost 3V for 40ms, turning them both on and drawing a large current. After this, the micro woke up and took control, driving the outputs low and turning off the Mosfets. Fitting 100kΩ resistors between the gates of both Mosfets and GND (across the protection zener diodes) holds the gates low during power-up and prevents the Mosfets turning on simultaneously and drawing large currents.

It's standard procedure to pull control signals from a micro to known states during power-up and while the processor is reset. Unfortunately, this one was missed. I expect there is the usual variation in Mosfet gate threshold voltages and this would have a significant effect on the size of the current spike and whether the fuse blew.

When I was looking at the problem I noticed there was a second design (Ultrasonic Cleaner, August 2010) that used a similar circuit and probably has the same issue.

Jeff Skeen,
Cherrybrook, NSW.

Comment: We have had a close look at the circuit and we think your analysis is correct but fitting the gate pull-down resistors will not necessarily cure the problem. Although in the specific case mentioned in the September 2016 issue, it probably would be the solution.

Considering that the micro's output states are uncontrolled before power-on reset, the voltage at the Mosfet gates can rise to around 3V, as you say. The mechanism is due to the voltage divider from the 12V supply formed by the Mosfet drain-gate capacitance (typically 270pF) and the gate-source capacitance (typically 1.2nF). The capacitance of the reverse-biassed diodes D1 & D2 would add to this effect.

Gate pull-down resistors would fix the problem but we are inclined to specify 10kΩ rather than 100kΩ.

However, note that much of the initial surge current is due to the large low-ESR supply bypass capacitor. This was proved in the development of a later commercial version of the design, which had gate pull-down resistors.

We also note that this problem has been relatively rare, considering the large numbers of this unit which have been built over the last six years.

Micromite memory saving advice helpful

I found the panel in the Appliance Energy Meter article on fitting the software into the Micromite (page 94, September 2016) quite interesting. I've a rather large program running on my Colour Maximite which was crashing with an "Out of Memory" error when doing a string manipulation after I added more code. The MEMORY command showed about 10% free. I also had about 100 variables of one sort or another. I had done some culling of string variables and other things previously.

I took the plunge and converted as many variables as possible that weren't in arrays into arrays, reduced name lengths, converted flags to bits etc. The result, when I eventually got the program up and running again, was a 50% reduction in variables, giving 29% free memory. I've now been able to add more features without any problems and there's now plenty of room for more expansion.

By the way, there was a comment by Geoff about the Colour Maximite and bulky VGA screens in the "Explore 100" article. The CMM may be long in the tooth but it still can serve a purpose when you want to display something large, so that it can be read across a room.

Regarding software tutorials, one of my main problems is working out the syntax of commands, eg, when I am supposed to use "quotes" in a command. I spent about three hours the other week trying to read and write data to a file on another directory on the SD card. I could read data from the COM1 port OK. I eventually got the process up and running; quite simple really, once you know what you are doing.

If Geoff Graham wrote examples for each command or function in the manual, that would be great, but would put a bigger workload on him and make the manuals that much larger. So I say the more hints, tips and code snippets, the better. The information given on The Backshed Forum is also great (www.thebackshed.com), but a lot of that is over my head which is understandable as the forum covers a diverse range of members with varied interests.

Brian Playne,
Toowoomba, Qld.

au.mouser.com

The Newest Products for Your Newest Designs®

MORE.™

mouser.com

The **widest selection** of the **newest products**.

australia@mouser.com
Distributing semiconductors and electronic components for design engineers.

MOUSER ELECTRONICS.

Mouser and Mouser Electronics are registered trademarks of Mouser Electronics, Inc. Other products, logos, and company names mentioned herein, may be trademarks of their respective owners.

Mailbag: continued

Potentially lethal electric fences are now legal

While it isn't uncommon to have a dispute with your neighbours, they aren't normally quite as threatening as ours.

As you have previously noted in articles regarding electric fences, the Australian Standard indicated a maximum pulse voltage of 10kV and maximum pulse energy of 5 joules. But this has been recently changed. The 10kV limit remains but the latest standards no longer specify a limit on the energy delivered by a single pulse.

As a result, electric fence energisers delivering 50J or more are now available. I guess this is to allow long electric fences of many kilometres. Unfortunately, this has lead to at least one death in Deloraine, Tasmania, not far from my property.

It seems that the logic behind the new Australian safety standard AS/NZS 3014 for the construction of electric fences is that the person will only get one shock and be thrown clear.

Electric fence wires should not be mixed with barbed wire, with a minimum distance of 150mm between them and the electric fence should not be near an object which could prevent the victim from moving away from the fence if shocked. The standard also states that the fence must be clearly labelled and also provides limitations on interference with phones etc.

My neighbour's fence breaks all of the above requirements (see photo below). That fence is not what prompted me to write this e-mail but it just happens to have been installed recently. Despite its lethality, I have not been able to have this wire removed.

I have had workplace inspectors out here but they don't have any authority over the matter. The electrical standards and safety inspector (the same one who investigated the death at Deloraine) said if it was included in the standards associated with AS3000, he could do something. Note that this would require an electrical contractor to install the fences.

It appears it is a local council matter. Sheffield local council does not enforce compliance with Australian National Standards. My question is how many deaths or serious injuries does it take to get something done? The fence shown injured my fit 8-year old horse. She was still sweating and shaking the next morning, 10 hours after receiving the shock.

Name withheld on request.

Comment: we are very concerned about the increase in pulse energy which now seems to be permitted. However, we have been unable to determine if there have been any deaths or injuries as a direct result of the change.

We contacted the Justice Department in Tasmania about this and the death you referred to appears to have occurred more than 10 years ago. Two horses were also killed in the north west of Tasmania some time in 2014 but again, this may have been because of an illegal fence installation rather than the specific energy in the discharge pulse.

The fence installation in your photo certainly seems to be quite dangerous and should be removed.

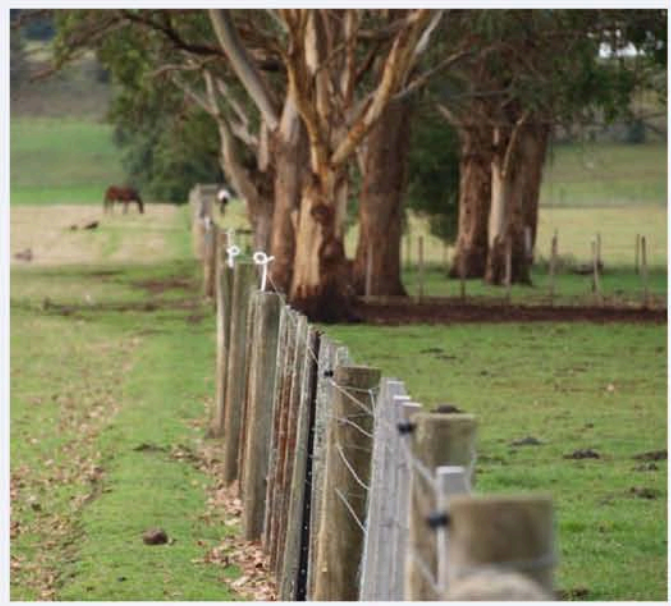

PCB Mounting LEDs from Aerospace & Defence Products

103 Series
Diffused, Standard Intensity LED
Lead cropping available
Range of LED colour and voltage options
Conforms to UL94 V-0 Flammability Rating
Reverse polarity options

109 Series
Diffused, Standard Intensity LED
Lead cropping available
Range of LED colour and voltage options
Conforms to UL94 V-0 Flammability Rating
Reverse polarity options

122 Series
Diffused, Standard Intensity LED
Suitable forauto insertion
Range of LED colour and voltage options
Conforms to UL94 V-0 Flammability Rating
Reverse polarity options

151 Series
Red and Green can be operated simultaneously for Amber
Diffused, Standard Intensity LED
Conforms to UL94 V-0 Flammability Rating

Call now for more information:
Aerospace & Defence Products
1/8 Apollo St, Warriewood NSW 2102

(02) 9979 9001 Fax: (02) 9979 9001
www.aerospacedefenceproducts.com.au

PIC® & AVR® MCUs

Together Your Possibilities are Unlimited

You have a desire to make technology smarter, more efficient and accessible to everyone. Microchip has a passion for developing products and tools that make it easier for you to solve your design problems and adapt to future needs. Microchip's portfolio of more than 1,200 8-bit PIC® and AVR® microcontrollers is not only the industry's largest—it incorporates the latest technologies to enhance system performance while reducing power consumption and development time. With 45 years of combined experience developing commercially available and cost-effective MCUs, Microchip is the supplier of choice due to its strong legacy and history in innovation.

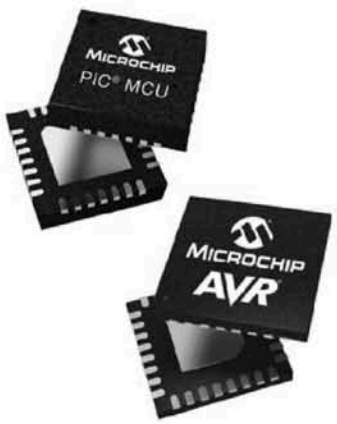

Key Features

- Autonomous peripherals
- Low-power performance
- Industry-leading robustness
- Easy development

Contact Information

Microchip Technology Australia
Email: aust_nz.inquiry@microchip.com
Phone: +61 (2) 9868-6733

www.microchip.com/8bit

microchip DIRECT
www.microchipdirect.com

MICROCHIP

The Microchip name and logo, the Microchip logo, PIC and AVR are registered trademarks of Microchip Technology Incorporated in the U.S.A. and other countries. All other trademarks are the property of their registered owners. © 2016 Microchip Technology Inc. All rights reserved.

The Easiest Way to Design Custom
Front Panels & Enclosures

You design it
to your specifications using our FREE CAD software, Front Panel Designer

We machine it
and ship to you a professionally finished product, no minimum quantity required

- Cost effective prototypes and production runs with no setup charges
- Powder-coated and anodized finishes in various colors
- Select from aluminum, acrylic or provide your own material
- Standard lead time in 5 days or express manufacturing in 3 or 1 days

FRONT PANEL EXPRESS
FrontPanelExpress.com

Silvertone
Distributors of quality test and measurement equipment.

Signal Hound –
USB-based spectrum analysers and tracking generators to 12GHz.

Virtins Technologies DSO –
Up to 80MHz dual input plus digital trace and signal generator

Nuand BladeRF –
60kHz– 3.8GHz SDR Tx and Rx

Bitscope Logic Probes –
100MHz bandwidth mixed signal scope and waveform generator

Manufacturers of the Flamingo 25kg fixed-wing UAV. Payload integration services available.

Find us on Facebook

Australian UAV Technologies Pty Ltd
ABN: 65 165 321 862 T/A Silvertone Electronics
1/8 Fitzhardinge Street, Wagga Wagga NSW 2650
Ph 02 6931 8252 contact@silvertone.com.au
www.silvertone.com.au

Mailbag: continued

Articles on SPICE simulation wanted

Have you ever done any articles on the circuit emulation package SPICE? I've heard of a circuit design package called KiCad which apparently can work with SPICE, whereas EAGLE doesn't seem to (but it can generate a netlist).

Dave Horsfall,
Gosford, NSW.

*Editor's note: we have not published any articles specifically explaining SPICE simulations but we have used SPICE in quite a few instances and gone into some detail in those cases to explain how we've used it, and provided simulation files. For example, see this article: **www.siliconchip.com.au/Issue/2011/July/A+Look+At+Amplifier+Stability+%2526+Compensation***

We have used both LTSPICE (Windows) and ngspice/gschem (Linux). In both cases, we simply re-drew the circuit, which generally isn't a huge amount of work. Probably the largest hassle is finding and loading all the component models your circuit needs. One of the advantages of LTSPICE is that it comes with a fairly large library of models built-in, although it is by no means comprehensive.

We will seriously consider an article or series of articles on using SPICE since it's such a handy tool for circuit design and experimentation.

Oximeters, pacemakers and an unfortunate incident

I was so interested in your January issue this year on the Oximeter article I bought one. The first day I tested it while walking. After doing a brisk 55-minute walk and walking up a small slope, my heart rate read 176 beat per minute with 99% oxygen saturation.

Unfortunately, the next day I was assaulted and while I was at the police station making a complaint, the police noticed I was sweating a lot. The police called an ambulance and the paramedics found my heart rate at about 200 beats a minute (BPM); they reckoned that it could have been that way for up to about two hours.

The hospital emergency department had to stop my heart three times before the heart started up at a slower rate of about 55 BPM. I must say it did freak me out a bit when the doctor first told me they were going to stop the heart. The good news was I never felt a thing from their defibrillator as the doctor put something into the artery or vein in my arm to numb the heart beforehand.

I spent about seven days in the intensive care ward and another 10 days in coronary rehabilitation. Just before they let me out, an Implantable Cardioverter Defibrillator (ICD) unit was inserted into my chest, a mini version of the Cardio Defibrillators from your article in February issue.

Within a week of getting out of hospital, I got a reminder to do the government department approved CPR refresher course all electricians and electrical workers have to complete to renew their license. I replied saying I would love to do it as I can not do much else, but I could not put any pressure on my left arm for a month or so which would

From 50 MHz to 4 GHz:
Powerful oscilloscopes from the T&M expert.

HD 16 bit

Multi Domain

Fast operation, easy to use, precise measurements.

R&S®RTO2000: Turn your signals into success. (Bandwidths: 600 MHz to 4 GHz)
R&S®RTE: Easy. Powerful. (Bandwidths: 200 MHz to 2 GHz)
R&S®RTM2000: Turn on. Measure. (Bandwidths: 200 MHz to 1 GHz)
R&S®HMO3000: Your everyday scope. (Bandwidths: 300 MHz to 500 MHz)
R&S®HMO Compact: Great Value. (Bandwidths: 70 MHz to 200 MHz)
R&S®HMO 1002: Great Value. (Bandwidths: 50 MHz to 100 MHz)
R&S®Scope Rider: 2 minutes to be sure. (Bandwidths: 60 MHz to 500 MHz)

All Rohde & Schwarz oscilloscopes incorporate time domain, logic, protocol and frequency analysis in a single device.

Take the dive at www.scope-of-the-art.com/ad/all

sales.australia@rohde-schwarz.com

ROHDE&SCHWARZ

OCEAN CONTROLS
Helping to put you in Control

Ultrasonic Level and Distance Sensor
Has a maximum range of 4.3m. It is built for use in tough environments. Fully submersible & shock resistant.
SKU: SNS-020
Price: $859.00 ea + GST

USB to RS-232 Converter
This converter uses the FTDI chipset and supports up to 1 Mbps data transfer rate. Cable length of 1.8m.
SKU: ZTC-005
Price: $47.95 ea + GST

Extended Distance M18 Diffuse Photo Electric Sensor
Features a sensing distance of 1.8-2 meters, with NPN output. PNP also available.
SKU: IBS-305
Price: $59.95 ea + GST

SST Liquid Level Sensor
The SST Liquid Level Sensor provides single point liquid detection via a TTL compatible push/pull output. This optical liquid level sensor has no moving parts to wear out or get stuck.
SKU: SFC-048
Price: $41.00 ea + GST

LED Light 500mm
Cabinet LED light 500mm. The slim design is easily mounted into cabinets or display cases. The Direction of the LED light can be set 0º, 45º or 90º. 24VDC powered available in 300, 500 or 1000cm length.
SKU: CSL-5240
Price: $34.95 ea + GST

Dual Axis Inclinometer ±10º
LCA series dual axis analog inclinometer senses tilt angles from -10º to +10º and gives two orthogonal 4-20mA outputs for X axis and Y axis.
SKU: SRS-043
Price: $175.00 ea + GST

Multi Function Timer
A simple to use and feature packed multi function timer. With 4 different time ranges and 7 modes of operation.
SKU: HNR-100
Price: $59.95 ea + GST

For OEM/Wholesale prices
Contact Ocean Controls
Ph: (03) 9782 5882
oceancontrols.com.au
Prices are subject to change without notice.

Mailbag: continued

PIC Programmer Improvements circuit correction

I have a comment on Len Cox's improvement of the dsPIC/PIC Programmer in the September 2016 Circuit Notebook pages, intended to protect Q1 from negative levels on the RS-232 input.

In short, his modification does not fully protect Q1 from excessive negative RS-232 input signals. The base-emitter junction characteristics of a silicon bipolar transistor are similar to those of a zener diode with a reverse breakdown voltage of about 5.6V. Operation in this region is unwise but does not usually result in permanent damage provided the circuit resistance is high enough to safely limit the current flow.

It should be noted that while the RS-232C specifications allow for signal levels in the range ±3 to ±24V, many computer systems use either ±5 or ±12V simply because these levels are commonly available from the computer power supply. However, it is prudent to design any RS-232 input to handle the full range and the proposed modification from Tony Ellis only protects from input signals up to about ±15V.

In my opinion, the most effective modification is to connect a small signal silicon diode (such as the 1N4148) in inverse parallel with the junction (replacing the 1.5kΩ resistor shown, cathode to Q1's base). This limits the reverse voltage to about -0.7V irrespective of the input level.

In the same issue, Ian Batty, in reviewing the Astor M5/M6 vintage radios, comments that "the reduced distortion of the M6 is testament to the use of negative feedback in the M6's amplifier stage". However, the circuit shown in Fig. 3 seems to show no negative feedback path for audio frequencies. I suspect that a resistor (#53?) has been omitted from the emitter circuit of transistor #74, possibly between the junctions of resistors #51 and #52.

Tony Ellis,
Porirua, New Zealand.

Comment from Ian Batty: Tony Ellis is correct, I omitted resistor #48, 22Ω, between the junction of transistor #74 emitter/resistor #51 and the junction of resistor #52/capacitor #23 (which was mislabelled as #22 in the diagram published). I'm thankful to people who take time to read over my work and to point out changes that need to be made.

Editor's comment: we have modified the Circuit Notebook item on page 97 of the September 2016 online issue issue. Similarly, we have substituted Ian Batty's corrected circuit for that shown on page 103 of the same issue.

make it difficult for me to do CPR.

As a result, they taught me to do chest compressions with my foot; like inflating a car tire with a foot pump. I wonder why I have never seen this technique before, despite having taken multiple first aid courses over the last fifty years.

The ICD unit in my chest sends information to a base unit I have under my mattress to report information daily to the manufacturer in Germany via the phone network and a copy is then sent back to the local pacemaker clinic.

One day a technician from the pacemaker clinic rang me and told me that my heart rate briefly went to 220 BPM and asked if I got a shock from the ICD unit. I replied: "No, that must have been the day I was on my daily exercise and walked up a couple flights of stairs at the local park." She added that it was good that the ICD unit was programmed to know that my heart rate can go that high and did not need to be activated.

Eric Richards,
Auckland, NZ.

The dangers of imported autotransformers

I saw your reply to D. H. about autotransformers in Ask Silicon Chip (October 2016, pages 99-100), so I thought I'd throw in my experience.

At the institution where I am employed, we have recently had a few 240V-115V autotransformers (up to 3kW) imported from China. They carry

PCBCART

Exceptional, Cost-effective
Full Turnkey PCB Service
from China's most experienced provider

With 10+ years' experience serving tens of thousands of international clients, our expanded custom PCB manufacturing, assembly and parts sourcing capabilities allow us to fulfill almost all kinds of PCB needs at reasonable price.

We insist each electronic project (including those still at prototyping stage) deserves superior quality PCB services, that's why we follow the strictest quality standards during production. Got a project ready to bring into reality? We're happy to discuss.

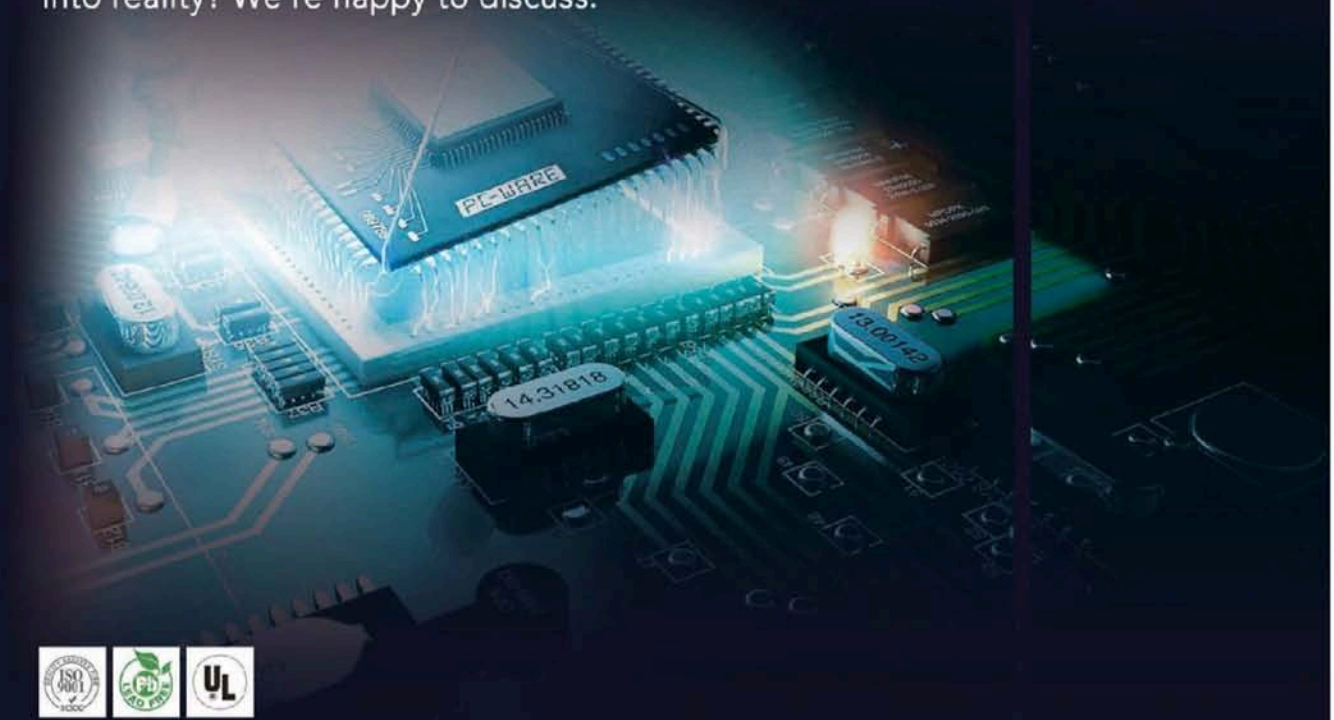

WWW.PCBCART.COM
sales@pcbcart.com

Mailbag: continued

Free magazines

I have a large collection of SILICON CHIP, ETI, AEM and EA magazines available free to a good home. They would need to be picked up from Morwell in Victoria.

The EA collection should be complete back to the sixties and includes Radio and Hobbies magazines. Contact me via email: neilh@wideband.net.au

Neil Hecker,
Morwell, Vic.

different brand names but appear to be very similar. They are finished with a heavy black gloss enamel, with various symbols claiming all sorts of regulatory compliance (including ISO9001 on some), and their internal construction seems pretty much the same.

Unfortunately, some are wired with the brown wire (in the 3-core mains input cable) connected to the terminal common to input and output and at least one came with a moulded three pin plug for Australia with the brown wire connected to the Active pin and common to the 115V output. The power switch is actually a circuit breaker, and often connected to the blue wire.

On these improperly wired units, the output terminals are at 240VAC and 130VAC (approx). The earth tag looks pretty wimpy, and is usually just clamped under one of the transformer mounting feet, usually with fixed self-tappers. Also there seems to be no attempt to remove transformer varnish or the case enamel from under the earth tag, although most units show low resistance from earth pin to exposed metal anyway.

Internal inspection reveals somewhat dubious wiring quality. Some research has determined that in at least one case, the claimed regulatory compliance is bogus and the consensus is that probably all the claims of regulatory compliance (C-tick, CE, etc and especially ISO9001) are bogus. On the units with the Active input connected to the output, one output terminal is connected to mains Active, even with the unit turned off at the front panel or if the circuit breaker has tripped, or even if the internal fuse blew (it is in series with the breaker).

These units could function satisfactorily but they present a hazard. If, for example, the Active and Neutral were swapped for some reason, say by using an incorrectly wired extension cable, power board or GPO, even a correctly-wired transformer could deliver 240VAC on one terminal to the load, even if the circuit breaker has tripped or the unit is switched off. If there was a short to earth in the load then the unit's circuit breaker may not trip at all.

As a consequence, these units have been banned at work and only isolating step-down transformers approved for use. I'd recommend that people only use 240V-115V transformers bought in Australia; that way, the

MikroElektronika Now stocked in
DEVELOPMENT TOOLS | COMPILERS | BOOKS
Buy online at www.glynstore.com.au

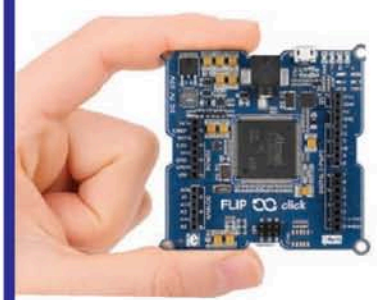

Arduino's two-sided cousin. While it may share many of the same attributes as the popular, open source platform including the 32-bit AT91SAM3X8E core of a Due, the pinout of an Uno and the ability to be programmed in the Arduino IDE via via microUSB, what really sets this new dev board from MikroElektronika apart is when you turn it over.

You'll find four mikroBUS sockets for "click boards." With more than 160 to choose from, Makers can prototype their next gizmo or gadget effortlessly by simply adding new functionality — ranging from Wireless, OLED displays to relays to sensors. That's 160^4 product combinations to set your imagination

FIRST CLASS PREMIUM SUPPORT
GLYN
High-Tech Distribution

sales@glyn.com.au
www.glyn.com.au
Tel: (02) 9889 2520 Fax: (02) 9889 2954

supplier is responsible for ensuring that they comply with local regulations, unlike units bought directly from overseas in which case the purchaser assumes responsibility for safety compliance.

On another issue, after reading your review of the new Keysight meters I decided I deserved an upgrade and bought a U1242C. It is a great meter packed with many beaut features and one that I discovered only after reading the manual.

According to the manual, the input impedance on the mV range (accessible through the thermocouple selection if enabled in setup) is switchable between 10 megohms and >1 gigohm. Well, except it wasn't when I tried it. Setup reported the input as "1000M" but measurements showed it was always only 10M. I contacted Keysight on the issue in early May, and nearly five months later they have come up with a rewrite of the firmware which fixes the problem. It should be available here:

www.keysight.com/main/software.jspx?ckey=878175&lc=eng&cc=TH&nid=-33167.1144468&id=878175

I was also curious about the U1242C's bandwidth, because I noticed that the Vsense was still working at about 20kHz and the meter seemed to work OK at frequencies well above the limit implied in the datasheet. So I compared it to a U1282A, and found a bug with the U1282A.

The U1282A comes with low-pass filters for both the DC path and the AC path; both can be enabled or disabled in setup. Unfortunately, an LPF was enabled in the AC path if the DC LPF was enabled in setup, regardless of whether the AC LPF was enabled or not. So there's also a newer version of the firmware which fixes that, and it should be available here:

www.keysight.com/main/software.jspx?ckey=1765967&lc=eng&cc=TH&nid=-33167.1144466&id=1765967

Unfortunately (bear with me, nearly done), the new firmware seems to introduce another bug. If you are measuring something on the ACmV range, then switch to the DCV or ACV ranges, then back to the ACmV range, the meter shows an incorrect value, down by a factor of about 20. Disconnecting the signal while switching ranges avoids this, and over-ranging the mV range can reset it. It is inconceivable that this could cause a safety problem since only the ACmV range is affected. I have been informed that another firmware update that will fix the problem is coming.

By the way, the U1242C seems to have little trouble measuring a 90kHz sinewave although accuracy suffers by a few percent. I estimate its -3dB bandwidth may well exceed 200kHz although I didn't test that far.

And finally, on the issue of Australian manufacturing (which is a topic that pops up in SILICON CHIP occasionally), a few years ago I bought a jacket from the iconic Australian outfitter R. M. Williams during a sale. It is a lovely coat, warm and comfy and unsurprisingly manufactured in China, made from 80% wool, 19% nylon and 7% polyester. Is it any wonder we are losing manufacturing to other countries if we have to compete with that sort of advanced technology?

Phil Denniss,
Darlington, NSW. SC

DOUBLE DIP

with SIGLENT®

FREE Bandwidth Upgrade!
FREE Options!

For a limited time, get up to 100MHz more bandwidth than you paid for with Siglent's Free Bandwidth upgrade offer...

THEN DOUBLE DIP !!!

Order the 16 Channel MSO option (probe and firmware) and get:

FREE Arbitrary Waveform and 25MHz Function Generator Option

FREE Serial Decode for I^2C, SPI, CAN, LIN, UART

Offer details

- Buy a 100MHz or 200MHz model and get a 200MHz or 300MHz model
- Buy 70MHz model and get a 100MHz model
- Buy SPL2016 and SDS2000-LA (MSO option) and get SDS2000-DC and SDS2000-FG free
- Buy 300MHz model and get free MSO, Decode and Waveform Generator options

Key Specifications:

- **Up to 140 Mpts acquistion memory**
- **2 GS/s max sample rate**
- **Waveform capture rate up to 500,000 wfm/s in sequence mode**
- **Waveform update 140,000 per second max**
- **Ethernet, USB host and device, Hardware pass/fail output, Trigger out**

CONTACT TRIO Test & Measurement

1300 853 407
or email
Sales@triotest.com.au
www.triotest.com.au

Airbags:

Your car's EXPLOSIVE guardian angels

You may not know it but if your car was built in the last 15 or so years, it will have at least two and maybe as many as nine highly explosive devices in the cabin! What? These explosive devices are the airbags – the so-called passive restraint devices designed to protect you and your passengers in the event of a collision. But don't worry about their incendiary nature – think of them as your guardian angels, ready to jump in between you and impending death.

Airbags are not passive! Well, they are passive in the sense that they sit there doing nothing – until they are triggered by the high g-forces of a collision. Then they rapidly inflate to cushion you against a collision with the dashboard or other parts inside the vehicle.

Most new cars sold in Australia have at least six airbags, such as the steering wheel (driver's) airbag, front passenger airbag, side airbags for front and back passengers and curtain airbags for front and back passengers.

There may (depending on the vehicle) also be knee airbags for both front occupants, a rear centre airbag, seat cushion airbags and rear window curtain airbags.

The purpose of the seat cushion airbag is to elevate the front of the seat to stop the passenger sliding forward in a collision. In addition, some vehicles may have a small airbag fitted to the seatbelt to more widely distribute the forces of the belt during impact. Also recently introduced are roof airbag designs and even external airbags to help minimise pedestrian injuries.

by Dr David Maddison

History of airbag development

While there are many mentions in automotive literature that airbags had their origins in 1941, I have been unable to find an original reference for this. It possibly relates to the practice of some WWII military pilots of inflating their life jackets to try to protect themselves in a crash.

The invention of the automotive airbag is generally credited to two independent inventors. American John W. Hetrick and German Walter Linderer had a US and a German patent awarded respectively within three months of each other in 1953.

Hetrick described what motivated him to develop the invention: *"In the spring*

The airbag timeline:

- 1953 Separate airbag patents by Hetrick and Linderer.
- 1964 US company Eaton Yale and Towne Inc. (now Eaton Corp.) start airbag research for school buses.
- 1964 Yasuzaburou Kobori in Japan starts development work on airbags.
- 1965 Ralph Nader releases book "Unsafe at Any Speed: The Designed-In Dangers of the American Automobile", highlighting problems of automotive safety, although it was heavily criticised for unfairness.
  See https://en.wikipedia.org/wiki/Unsafe_at_Any_Speed#Criticisms_of_the_book
- 1967 Cheap and reliable collision sensor developed by David Breed.
- 1968 Practical gas generating system developed by John Pietz.
- 1971 Ford builds experimental airbag equipped fleet.
- 1973 General Motors sells airbag equipped Chevrolet Impala only to government buyers.
- 1973 Oldsmobile Toronado first car with passenger airbag sold to public.
- 1974 Buick, Cadillac and Oldsmobile offer dual airbags as an option on several models.
- 1976 By this time GM had sold 10,000 airbag equipped vehicles but stopped selling them.
- 1980 Mercedes-Benz offer an airbag in Germany as an option on its model W126.
- Mid-1980's Ford and Chrysler introduce airbags.
- 1990 Ford makes airbags standard equipment on all its passenger vehicles.
- 1990 First recorded accident between two vehicles in which the airbags deployed to protect each driver.
- 1990 Airbags or automatic seat belts required on driver's side on all new US cars.
- 1995 Volvo offers side airbags and torso side protection airbags as an option on its 850 models.
- 1998 The US government mandates dual frontal airbags on all passenger vehicles.
- 2006 Honda introduces the first airbag for motorcycles, on the Gold Wing model.

of '52, my wife, my seven-year-old daughter, Joan, and I were out for a Sunday drive in our 1948 Chrysler Windsor. About three miles outside Newport (Pennsylvania, US), we were watching for deer bounding across the road.

Suddenly, there was a large rock in our path, just past the crest of a hill. I remember hitting the brakes and veering the car to the right. We went into a ditch but avoided hitting both a tree and a wooden fence.

As I applied the brakes, both my wife and I threw our hands up to keep our daughter from hitting the dashboard. During the ride home, I couldn't stop thinking about the accident. I asked myself: 'Why couldn't some object come out to stop you from striking the inside of the car?'"

Drawing from German patent 896,312 of 1953 by Walter Linderer. It was filed on October 6th, 1951 and granted November 12th, 1953. Loosely translated into English, the title of the patent is "Facility for the protection of passengers against injuries in vehicle collisions".

At the time, Hetrick was unable to get the auto-makers interested in his invention and he did not have the funds to develop it so nothing became of the idea.

Ford and General Motors in the US started experimenting with airbags (or inflatable restraints, as they were then called) in the late 1950s.

Both Hetrick's and Linderer's airbags were inflated with compressed air. But further research showed that compressed air was not capable of inflating the bags fast enough in the event of an accident and that the bag had to be inflated within around 40 milliseconds or less, which is the time between the original impact and passengers hitting the dashboard in a typical collision.

Practical airbags would also need a much more sensitive collision sensor than in the original Hetrick system.

In 1964 Eaton Yale and Towne Inc started doing airbag research to protect children on school buses. They were later approached by Ford to work on automotive airbags.

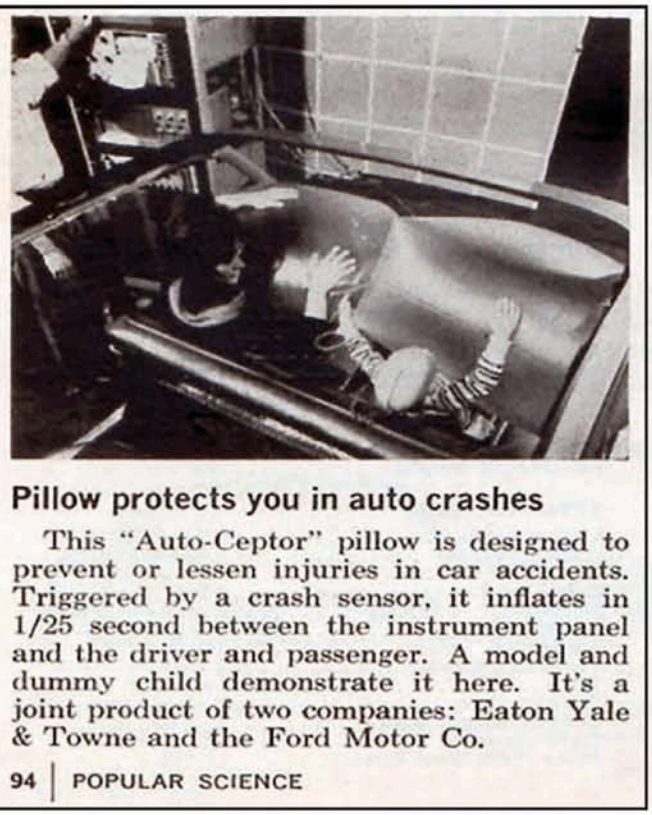

Pillow protects you in auto crashes

This "Auto-Ceptor" pillow is designed to prevent or lessen injuries in car accidents. Triggered by a crash sensor, it inflates in 1/25 second between the instrument panel and the driver and passenger. A model and dummy child demonstrate it here. It's a joint product of two companies: Eaton Yale & Towne and the Ford Motor Co.

94 | POPULAR SCIENCE

Auto-Ceptor experimental airbag as shown in the May 1968 Popular Science magazine.

They developed what they called "Auto-Ceptor" restraints. These airbags seemed to work well enough and used pressurised nitrogen (not withstanding other research suggesting that compressed gas could not inflate the bag fast enough).

In 1969 these airbags were taken to Washington DC to demonstrate to US Government officials but the system failed to activate during the demonstration. Henry Ford II was furious and temporarily cancelled the program.

In 1964 Yasuzaburou Kobori in Japan also started development work on an airbag "safety net" for which he received patents in 14 countries but died before seeing widespread adoption of airbags. See www.jahfa.jp/jahfa6/pala/person5-1.htm for more about him (use Google translate to convert the Japanese text to English).

David Breed developed a key component of airbag systems in 1967 in the form of the cheap and reliable "ball-in-tube" inertial crash sensor which he marketed to Chrysler Corporation.

This invention is frequently also attributed to Allen Breed (mentioned later) but it is believed that David Breed is the actual inventor.

Another important invention that made airbags feasible was a chemical system to generate large amounts of gas in a short time (ie, the explosive).

In 1968, John Pietz at Talley Defense Systems in the US developed a gas generating system based on the chemical reaction of sodium azide (NaN_3) and a metal oxide. It produces nitrogen gas as the reaction product which inflates the bag. Mainly due to the toxicity of sodium azide, other gas systems have now been developed and largely replaced sodium azide in modern airbags.

In 1971, Ford produced an experimental airbag equipped fleet of cars. This was followed in 1973 by GM producing a fleet of Chevrolet Impalas for use by the US Government, and in the same year GM offered an Oldsmobile Toronado to the public. Following this in 1974 Buick, Cadillac and Oldsmobile offered airbag options on various models.

When General Motors in the US first marketed airbags in the 1970s they were referred to as the "Air Cushion Restraint System (ACRS)".

Their original purpose was to replace seatbelts as there was significant resistance to wearing seatbelts in the US at that time. A corporate video of the time reflects their purpose as a seatbelt replacement or substitute.

See "*1974 Buick – Airbags*" https://youtu.be/ZyYdUQl-1WNc and the comments about the possible hazards involved in their deployment when children are in the car. Also see a modern review of the ACRS equipped car "*Air Cushion Restraint System – 1973 Chevrolet Impala Airbag*" https://youtu.be/XT1Sl4m3Qe4

Allen Breed co-patented an airbag which vented gas as it expanded, which reduced the rigidity of the airbag and injury from impacting it. This had been a problem in earlier airbags which did not deflate significantly.

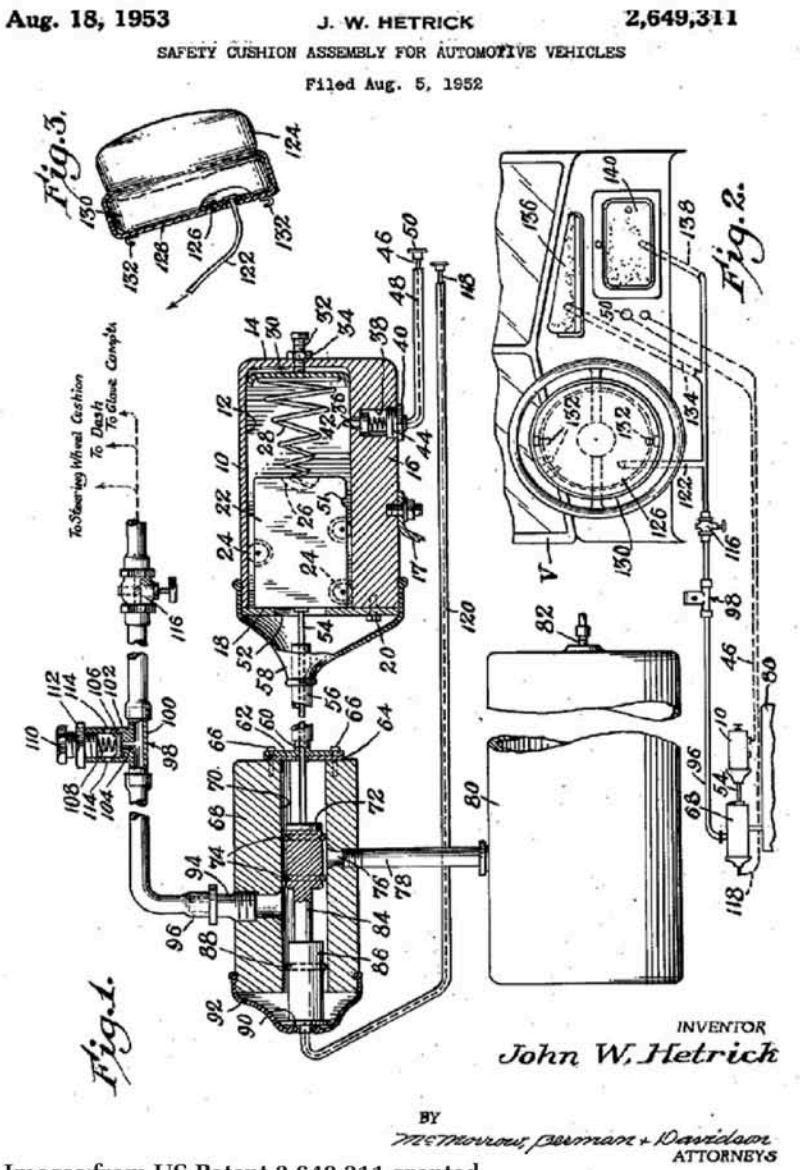

Images from US Patent 2,649,311 granted August 18th, 1953 but filed August 5th, 1952, "Safety cushion assembly for automotive vehicles" by John Hetrick. Fig.1 shows the air accumulator and valve assembly. Fig.2 shows the relationship between the various parts including the "cushion" mounted in the steering wheel and Fig.3 shows the steering wheel mounted cushion and how other components relate to it.

The patent was awarded in 1991 and can be viewed at https://docs.google.com/viewer?url=patentimages.storage.googleapis.com/pdfs/US5071161.pdf

Why airbags work

Airbags are designed to counter the consequences of Newton's First Law of Motion which describes the tendency of anything that is in motion to stay in motion.

The forward motion of a car has a certain amount of kinetic energy associated with it.

In the case of a car that is fine . . . until that motion comes to an unplanned and abrupt halt such as in a collision.

Modern cars are designed to absorb some of that kinetic energy by crumpling but the passengers too must have their kinetic energy absorbed.

Seatbelts (if they are worn) will restrain passengers to

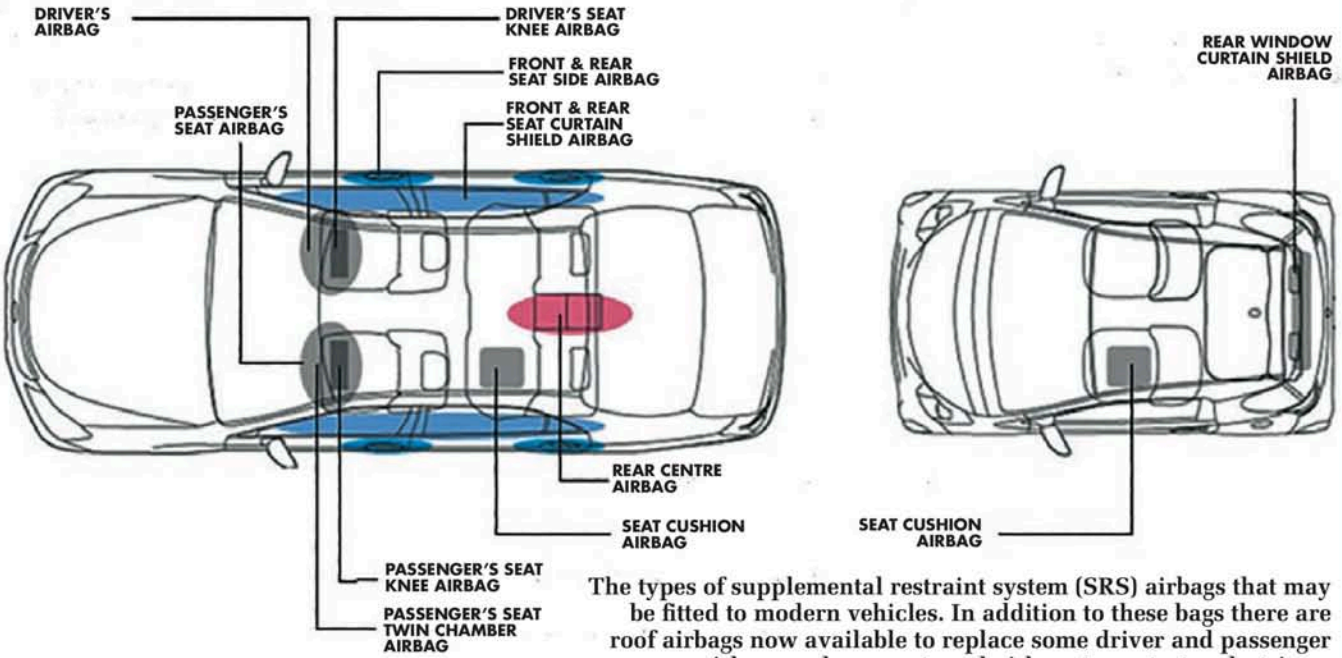

The types of supplemental restraint system (SRS) airbags that may be fitted to modern vehicles. In addition to these bags there are roof airbags now available to replace some driver and passenger airbags and even external airbags to protect pedestrians.

a certain degree but mainly only the torso. Passengers' heads, arms and legs are still able to flail about and hit objects within the car such as the steering wheel, dashboard or windows.

When a severe collision is detected an airbag rapidly inflates and then deflates via holes in the bag. The energy of the passenger striking the airbag is absorbed via release of this gas.

If the airbag did not deflate, little energy would be absorbed and the passenger would just bounce off the airbag and little protection would be provided. Early airbags did not deflate significantly and were responsible for some injuries and deaths.

Note that US regulations require that airbags work with unbelted as well as belted occupants, making their design considerably more complicated.

In most other Western countries airbags are designed to work under the assumption that the passenger is wearing a seatbelt.

The airbag system

Airbags do not operate in isolation – they're a complete system, more often than not integrated with other systems within the vehicle. A basic airbag system consists of an airbag module, crash sensors, clock spring and an airbag control unit, or ACU.

The **airbag module** consists of one or more igniters, the propellant material which creates large amounts of gas to fill the airbag when it is ignited, a canister and the airbag itself. There are generally no electronics in the airbag module and it can be simply set off by supplying 12V to the igniters (see the panel "Interesting Videos" where some show letting off old airbags for fun).

Typically, Australian airbags are triggered when collision forces are equivalent to hitting a solid object at 25-50km/h, or 60km/h into another

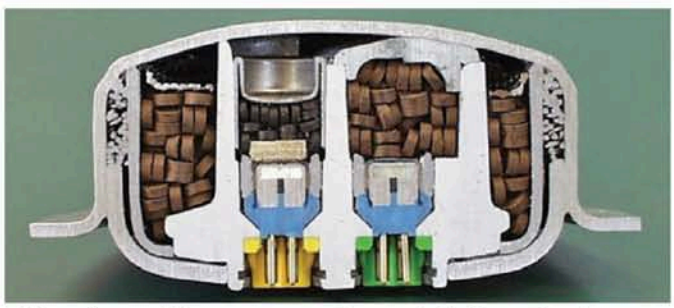

(Above): an airbag gas generator module for a steering wheel airbag. Pellets are the propellant material. The two modules at the base either side of centre are the igniters. One or both of these are fired depending upon the severity of the crash. Surrounding the assembly is a strong canister. On the far right and the far left of the canister is a wire mesh filter. This stops particles from the gas generator exiting out of holes in the side of the canister (not visible) into the nylon airbag surrounding the canister (also not visible).

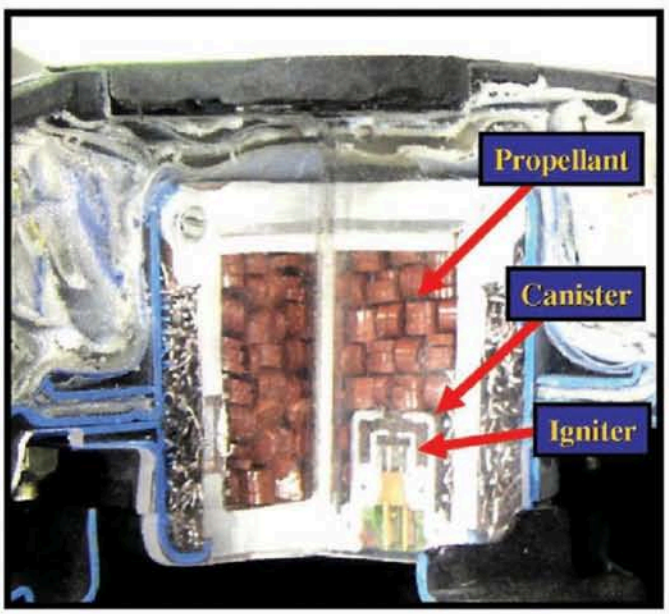

(Right): a view of a different steering wheel airbag module showing the relative position of the Nylon bag.

car, equivalent to forces of about 20g.

The front airbag generally inflates in about 65ms or less. The crash sensor takes about 12 to 20ms before an airbag deployment is triggered; side airbags inflate more rapidly.

The maximum pressure achieved inside a modern airbag is surprisingly low, about 34kPa, 5 psi or 0.34 atm.

This low pressure is due to the fact that even as the airbag is inflating it is continuously venting. If it wasn't vented, as early airbags were not, serious injury (or worse) could be caused by a far more rigid airbag.

The driver and/or passengers strike the airbags when they are at their maximum expansion. The airbags then rapidly deflate as gas is vented through holes facing away from passengers. As this gas is bled off, energy is dissipated. After the collision, the sequence is complete and the bag is fully deflated.

Modern airbags are frequently multi-stage, with one or more igniters to produce an appropriate amount of gas for the severity of the collision and the weight of the occupant as determined by weight sensors in the seat.

Airbags are typically made of Nylon fabric with a polyurethane coating (or more recently a silicone coating which is less affected by ageing).

As the airbag inflates, it bursts its way out of its container (such as the steering wheel cover). The bag is coated with talcum, French chalk or corn starch powder to help it unfold smoothly – this is the "smoke" that can be seen in some deployment videos.

Some airbag deployment videos as seen on driver's dash cams can be seen at "*Car airbag crash live video (Caught On Dashcam)*" https://youtu.be/ab2qLV547FA

Airbag crash sensors detect a rapid change in velocity and determine if a collision has occurred, the type of collision and its severity. The sensors also determine if the crash is frontal, sideways or rollover type.

The type of collision detected determines which (if any) airbags will be deployed – they will not be deployed for minor collisions and not all airbags will necessarily be deployed, even for more severe collisions. It depends upon whether the airbag will be helpful or a hindrance for the type of collision detected.

Note that normal braking, no matter how hard, will never cause airbag deployment.

The sensors are typically located in the front of the car for frontal crash detection (near the engine or passenger compartment or inside the ACU), the side of the car for side impact detection (in the door or door sill, between front and rear doors or the ACU) and for rollover detection the sensor will be located either near the car's centre of gravity or in the ACU.

Older technology airbag crash sensors were mechanical in nature such as the ball-type sensor and the roller-type sensor.

The next generation of technology were piezoelectric devices while the present generation are mainly solid-state MEMS (microelectromechanical systems) accelerometers designed to sense the high-G forces in typical collisions.

The sequence of airbag deployment for a steering wheel airbag. (1st picture) A crash is detected and the airbag starts to inflate. (2nd picture) The bag is fully inflated as the driver's face is just about to hit the bag. (3rd picture) The driver's face hits the bag and it immediately starts to deflate (Remaining pictures) Progressive deflation of airbag and rebound of driver's head.

Disassembled clock spring assembly from an Audi, as shown on forum post at http://forums.quattroworld.com/a6100/msgs/21794.phtml discussing the repair of this component. Note the coiled ribbon cable on the lower right. At the left is the top assembly that goes over the ribbon cable. This one has only two wires in the ribbon cable but there may be many more when there are a lot of controls or indicators on the steering wheel.

High speed thermal images of airbag at a particular instant during deployment showing side view, view of gases being vented from rear ports after deployment and frontal view.

MEMS devices have been in use since the mid 1990s. The mechanical devices were either off or on but the solid state devices can supply more detailed information about the nature of the collision and contribute to a more appropriate decision as to the deployment or not of airbags and other safety systems such as seat belt tensioners.

The clock spring is a component that provides the electrical connection between the car's wiring harness and the steering wheel airbag, allowing for an electrical connection between the stationary steering column and the rotating steering wheel.

It may also be used to provide a connection to other switches or indicators on the steering wheel.

The clock spring typically consists of a length of ribbon cable located between a small cylinder and a larger cylinder which is free to wind up or unwind when the wheel is rotated. It is a rather simple and elegant system.

For a video showing the location and inner workings of the clock spring you may wish to look at "*Clock Spring Replacement - Toyota / Lexus*" https://youtu.be/862izi6XChI

The **airbag control unit** (ACU) is a form of electronic control unit (ECU), which in turn is simply an embedded system that controls various subsystems within the car.

The ACU is the "brains" responsible for control of the airbag system. It tests the airbag system at start up and monitors various sensory inputs while a car is in operation.

Sensors monitored include crash sensors, gyroscopes, speed & brake sensors, and sensors to monitor the occupancy of a seat and the weight of the person in it.

Rollover detection requires the use of a gyroscope and low g-force sensors. The combined data from the gyroscope and low g-force sensors is used to determine the angle of the car and rotational rate, thus enabling the ACU to compute the optimal time to deploy the airbags and other systems such as seat belt tensioners.

In a given crash scenario, not all bags will necessarily be deployed – for example, bags associated with unoccupied seats will not be activated.

Also, airbags are not deployed if such deployment would cause injury, for example, if there was a child seat present or there was an out-of-position passenger, as determined by seat sensors, the relevant airbags would not be deployed.

There is no universal algorithm to establish airbag deployment or non-deployment. Each car model needs to have its own algorithm, tailored to suit the specific needs of that model of car, based upon crash simulations and testing.

Efforts are underway to develop neural networks to provide smarter more effective airbag deployment and control with more universally applicable algorithms.

In the event that the vehicle battery becomes disconnected during a severe crash, most modern airbag control units have backup power available, usually in the form of a large capacitor, such as the 33,000µF capacitor in the ACU of a first generation US model Mazda MX-5 Miata.

Backup power for ACUs is said to typically last from a few seconds to up

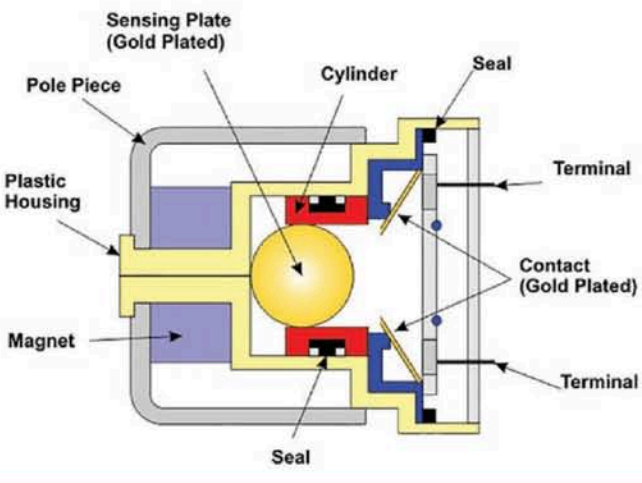

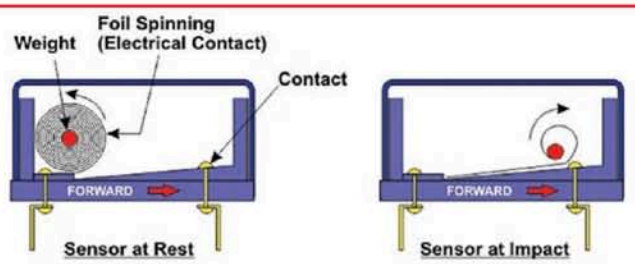

(Above): roller-type sensor. There is a weight on a spring which, upon impact rolls to the right. If the impact is severe enough, causing the weight to roll far enough to the right, an electrical circuit will be completed. This will be sensed by the ACU, which decides whether to deploy the airbag or not. (Left): ball-in-tube type sensor. Upon impact, the ball shifts to the right and connects to contacts, which complete an electrical circuit which is sensed by the ACU and a decision is made whether or not to deploy an airbag.

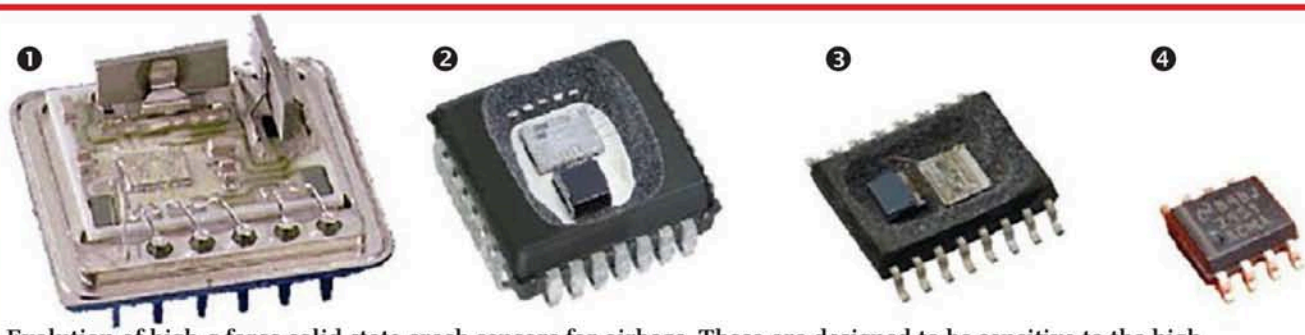

Evolution of high-g force solid state crash sensors for airbags. These are designed to be sensitive to the high g-forces in typical collisions. (1) Hybrid piezoelectric device in use from 1984 to 1997, (2) solid state silicon MEMS micromachined capacitive device (1997 onwards), (3) smaller form factor MEMS silicon capacitive device (2002 onwards), (4) present generation MEMS device with further reduced package size.

to ten minutes after loss of main vehicle power and allows for the airbags to still be deployed.

Most airbag electronic control units use the CAN (Controller Area Network) that is commonly used in all control and communications systems in modern cars.

Event data recorder

Nearly all modern cars have an event data recorder (EDR) associated with the ACU. This runs in a loop mode, recording various data at the time of a crash, such as speed, brake position, steering angle, whether seat belts are buckled and so on.

This data recording has raised privacy concerns in various jurisdictions and has been used to convict people of driving offences, including in NSW.

Nevertheless, questions remain about who owns the data and who can rightfully access it.

As of 2014 every major company selling cars in the USA had EDRs except for VW, Maserati and Ferrari.

There are companies in Australia that will read EDR data for prosecuting authorities and insurance companies. In the US there are companies that will delete EDR data upon request.

Roof and front-seat mounted rear airbags

Former spacecraft manufacturer and now major automotive eqipment supplier, TRW, has recently developed and introduced a roof airbag.

Its main purpose is to make more space available in the vehicle's dashboard, thus allowing for more instrument panel space, multimedia displays, storage space and also the possibility of reducing the overall size of the dashboard.

The bag is mounted in an enclosure above the windscreen. As well, a version has been developed for rear seat passengers with the airbag mounted on the back of the front seats.

Airbags to protect pedestrians

Volvo have developed an external airbag to minimise injury to pedestrians that may be struck by a car.

This system was introduced with the 2012 Volvo V40. For a video of the system in operation and other details see: "*Volvo V40 Pedestrian Airbag*" https://youtu.be/w2pwxv8rFkU

TRW have also developed an external side airbag to minimise forces of a side impact. See video: "*Car Tech 101: External airbags (On Cars)*" https://youtu.be/XrcbAcfXvUo

Non-automotive airbags

Apart from their most common application in cars, airbag safety technology is also used in some motorcycle jackets, motorcycles and aircraft.

Motorcycle jacket airbags

Some motorcycle jackets now have

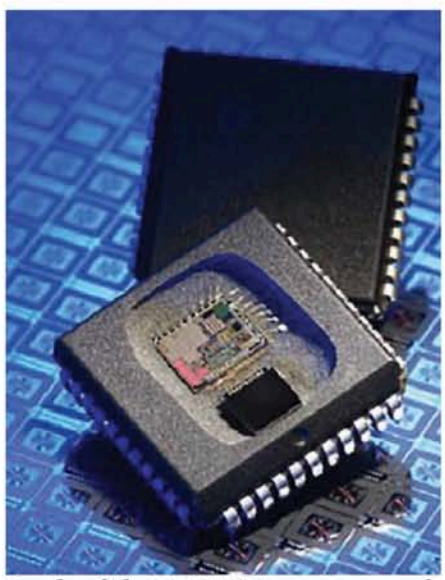

Bosch solid state MEMS gyroscope and low g-force sensor for rollover detection.

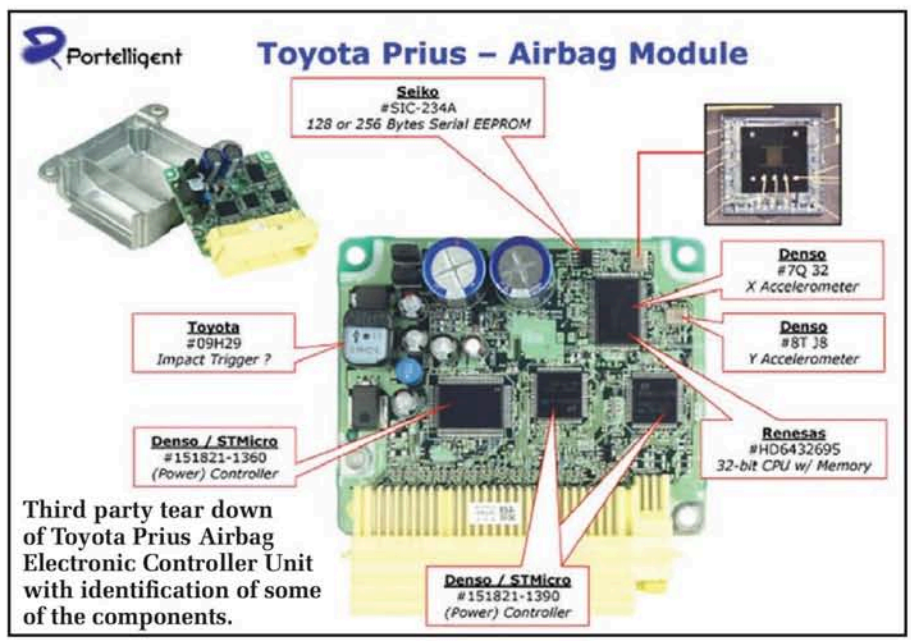

Third party tear down of Toyota Prius Airbag Electronic Controller Unit with identification of some of the components.

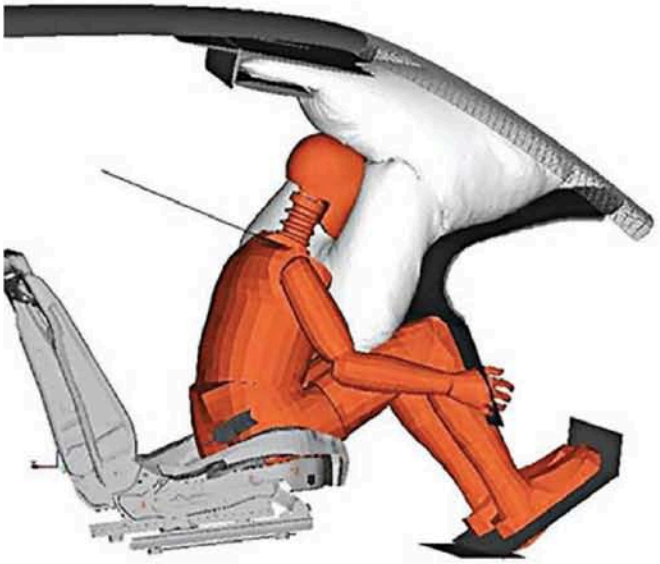

(Above): centre airbag to stop passengers hitting each other in the event of a side impact.

(Right): simulated deployment of TRW roof airbag as used in the 2014 Citroën C4 Cactus.

built in airbags that inflate when a collision event is detected. One example of a commercial jacket is the D-air Misano 1000.

This jacket, unlike most others, has no connection to the bike and has its own built-in sensors which determine when the airbags should deploy. See corporate video: "*Dainese How to: D-air Misano 1000*" https://youtu.be/nJeKJgUNSHk

For amateur video of a crash where a rider was saved from injury while wearing another brand of airbag jacket see "*Motorcycle Crash with a Rider wearing Helite Airbag Protection*" https://youtu.be/jdH8e22x74Q

Motorcycle airbags

Since motorcycles are one of the most dangerous forms of road transport, any improvement in road safety is beneficial.

In head-on impacts of motorcycles with other objects the rider tends to keep moving forward and strikes parts of the motorcycle as well as the object being struck at pre-crash speed. The objective of any restraint system would be reduce the speed at which the motorcyclist strikes the opposing object.

It may seem surprising to some that airbags have actually been fitted to motorcycles. Crash tests were done as early as 1973 that demonstrated that an airbag could reduce injury although the overall results were not considered entirely satisfactory. These tests were followed up in the UK in the 1990s.

In the UK tests it was shown that a motorcycle airbag placed in front of the rider in a way that the rider would strike the bag with their head and chest rather than the motorcycle or opposing object was highly effective up to speeds of 48km/h but full restraint of the rider was not possible beyond that speed, although there was still a beneficial safety affect. Tests showed a reduction in kinetic energy of the rider of between 79% and 100% and reduced neck injuries.

In the UK study it was noted that approximately 75% of motorcycle accidents occur at motorcycle impact speeds

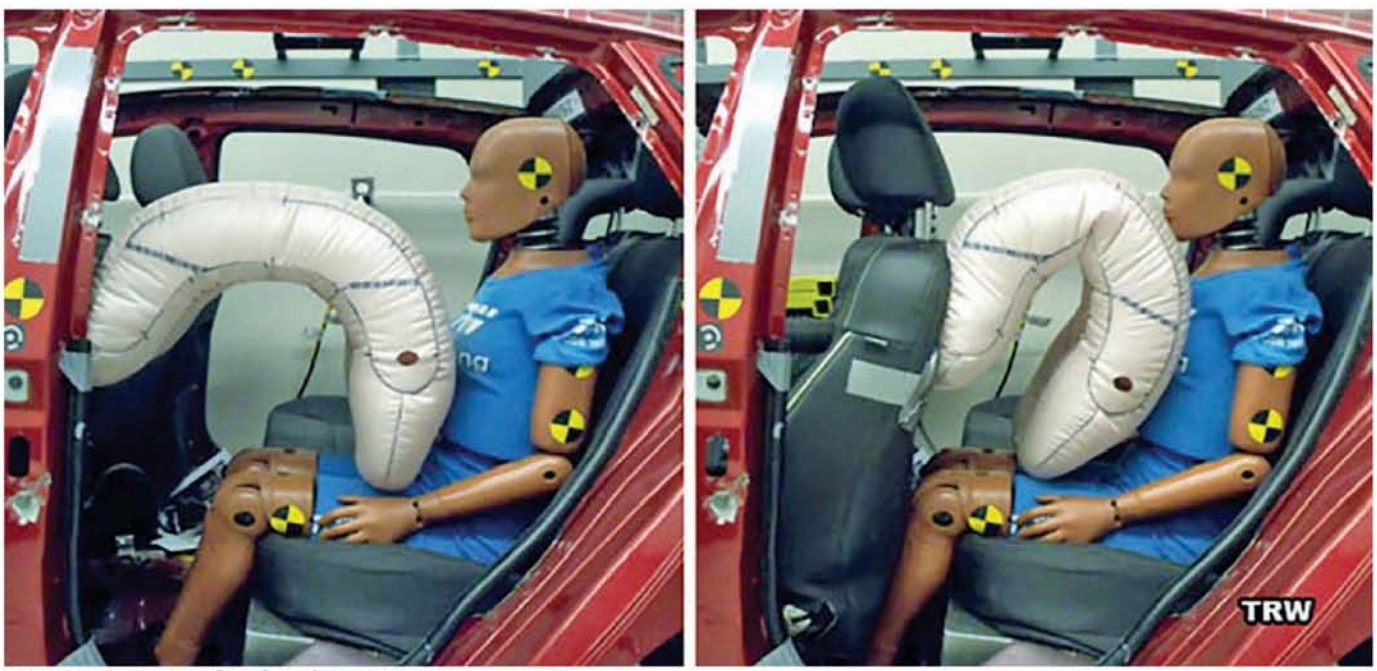

Front seat mounted airbag for rear seat passengers.

(Above): 2013 Volvo V40 showing pedestrian air bag which also raises the bonnet when activated.

(Right): Experimental external airbag by TRW. It is expected to reduce side impact forces by 30 percent. It has a volume of 200 litres and will take longer to inflate than normal airbags so it has to be trigged even before the collision occurs.

of up to 48km/h, and 96% up to 64km/h and that 93% of the serious and fatal head injuries occur at speeds of up to 64km/h.

It was also noted that a majority of fatal and serious head and chest injuries occurred in roughly head-on impacts of the motorcycle and something else and that a majority of accidents with an opposing vehicle occur with the speed of the opposing vehicle at 25km/h or less.

In the light of these statistics it was decided to optimise the design of an airbag system for head-on impacts of the motorcycle into stationary or slow moving vehicles of up to 25km/h with additional injury reduction potential for impacts up to 64km/h. It is assumed these figures are for the combined speeds of both vehicles.

Honda has had an airbag installed on their Gold Wing model since 2006. For a video see "*Honda Goldwing Airbag System*" https://youtu.be/-1wS5XxuT30

Aircraft airbags

A number of commercial airlines use airbags. First introduced in 2001, they are attached to the seatbelts and tens of thousands are in current use. The bags are designed to fill the void between the passenger or pilot and the seat, bulkhead or instrument panel in front of them. For a video see "*Amsafe - How Seatbelt Airbags Work*" https://youtu.be/lZfPJG3LXxk

Military helicopter airbags

The US Army undertook an upgrade program of the Bell OH-58D helicopter to become designated the OH-58D(R) Kiowa Warrior and included many safety and other improvements including pilot airbags.

Anglo-Italian company Aero Sekur have developed external airbags for helicopters to increase survivability in the event of a forced landing on land or sea as well as providing floatation at sea.

D-air Misano 1000 motorcycle jacket with airbags and built-in crash sensors.

Safety improvements due to airbags

According to the Australian Government's Bureau of In-

Test of early motorcycle airbag on a Norton Commander in a frontal collision with side of car. UK Transport Research Laboratory and Lotus Engineering, report published 1996.

Interesting Videos

Here are a few videos on what is involved in replacing or repairing airbags that have been deployed.

These are included here for general information (and in some cases entertainment!) only – SILICON CHIP strongly recommends against doing this yourself and it may even affect your insurance coverage.

The point of presenting these videos is to show some of the inner workings of the airbags and what is involved when a professional replaces them.

Also note that in many late model cars the vehicle computer has to be reset after an airbag deployment has been made and crash data is also recorded. There are a couple of videos on that as well.

Apart from that, the strength of the collision that is required to deploy an airbag is significant and it is likely that there is other serious damage done to the car.

This may not be the case in other countries such as the US where airbags are designed to deploy at lower roads speeds than in Australia since in the US there is a higher likelihood that someone may not be wearing a seat belt and the airbags have to protect an occupant who may not be wearing one.

This perhaps explains why there are a number of US videos about replacing airbags – an airbag might be deployed at relatively low road speed with relatively minor vehicle damage.

"*How to detonate an airbag, airbag repair, and demonstration*"
https://youtu.be/8Fxr-dRiklE

"*HOW TO FIX AND REUSED A DEPLOYED AIRBAG*" (sic)
https://youtu.be/pAZ41pKbKAo
(Definitely don't try this!)

"*How to Replace an Airbag on a Vehicle*"
https://youtu.be/Hadsvt17Fj0

"*Carprog setup, Airbag resetting*"
https://youtu.be/9cJjZo3QWLU
(Silent)

"*How to Reset / Repair clear the crash data from GM Airbag control module*"
https://youtu.be/9dRR9Ytd7So

At the risk of being accused of being irresponsible for including these, some entertaining videos of people deliberately setting off surplus airbags can be seen here:

"*Setting Off Airbags*"
https://youtu.be/k31V0NvFXdg

"*THE BEST AIR BAG EXPLOSIONS 2013*"
https://youtu.be/JBcvwWUZ0PA

Aero Sekur external airbags on a helicopter. The system was showcased at the 2010 Farnborough International Airshow but does not appear to have been commercialised.

frastructure, Transport and Regional Economics (publication ISSN 1440-9593 information sheet 68), front airbags are estimated to have reduced light vehicle fatalities by 13% and side airbags have reduced fatalities by 4%.

But other research quoted in that document makes an assumption that front airbags reduced fatalities by 25% for drivers and 20% for passengers in front impact crashes.

It is difficult to ascertain the exact impact of airbags because they have accompanied many other safety upgrades in cars.

Two major Australian automotive insurance companies were contacted by SILICON CHIP to ask about whether personal injury costs had decreased as a result of airbag use and what change there had been in car repair costs associated with airbags but the information was not provided.

The future

We will see more airbags and more sophisticated airbags installed in cars and other vehicles.

New crash sensing algorithms, such as those based on neural networks, will also be developed to allow more intelligent airbag deployment.

Airbags combined with other safety systems in modern cars will see driving become even safer but it should not be forgotten that the ultimate responsibility for safer driving resides with the motorist. SC

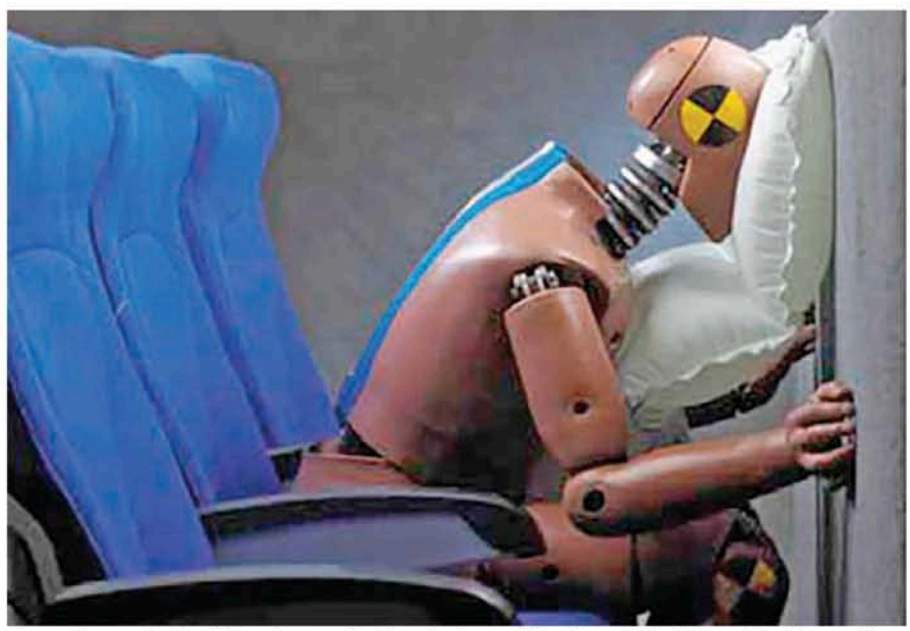

Amsafe seat belt airbag in crash simulation with aircraft bulkhead in front of passenger.

You've probably heard the expression. But what is it?

IoT: The Internet of Things

Ask most people what is meant by "The Internet of Things" or IoT and you'll receive a blank look and an "ummmm". Same with LoRa – occasionally, respondents will know it stands for Long Range but beyond that, little if anything. So what do these terms mean and why are they becoming more and more important?

By Ross Tester

You might believe that The Internet of Things (or IoT) is a very recent development, say the last couple of years or so.

It surprises many to find that the term was first used last century (OK, just – 1999!) by British entrepreneur Kevin Ashton. His vision, if you like, was a global network of "things" connected to radio-frequency identification (RFID) via the internet. IoT has gone a long way past that!

However, this wasn't the first time the concept was aired: in 1982, a modified Coca-Cola machine at Carnegie Mellon University in Pittsburgh, USA, became the first internet-connected device that wasn't simply a terminal. It was able to report its inventory and whether newly-loaded drinks were cold.

(Remember that the internet was originally "invented" for communication within, and between, universities – a relatively long time before it evolved into the internet as we know it today).

Several papers in the 1990s hinted at what has become the IoT. One even suggested **everything** would eventually be tagged or digitally watermarked so that it could be recognised. We haven't quite got that far yet.

Yet – barcodes and QR codes on virtually all manufactured products are going a long way to making the prophecy a reality. We haven't quite got to barcoding people (although many have inserted tags under their skin – see Dr David Maddison's article on "Biohacking" in the August 2015 SILICON CHIP).

Obviously, computers and networks have come a long, long way since those days. And as more and more people upgrade to faster and more powerful computers, and migrate to faster and much higher capacity broadband (did someone mention the NBN?) so the number of devices connected to the 'net and the sending/receiving of data has also grown enormously.

So yesterday's dream has become today's reality – and

Internet-connected fridges (such as this Samsung) were set to become the "next big IoT thing" but while still available, haven't exactly set the world on fire!

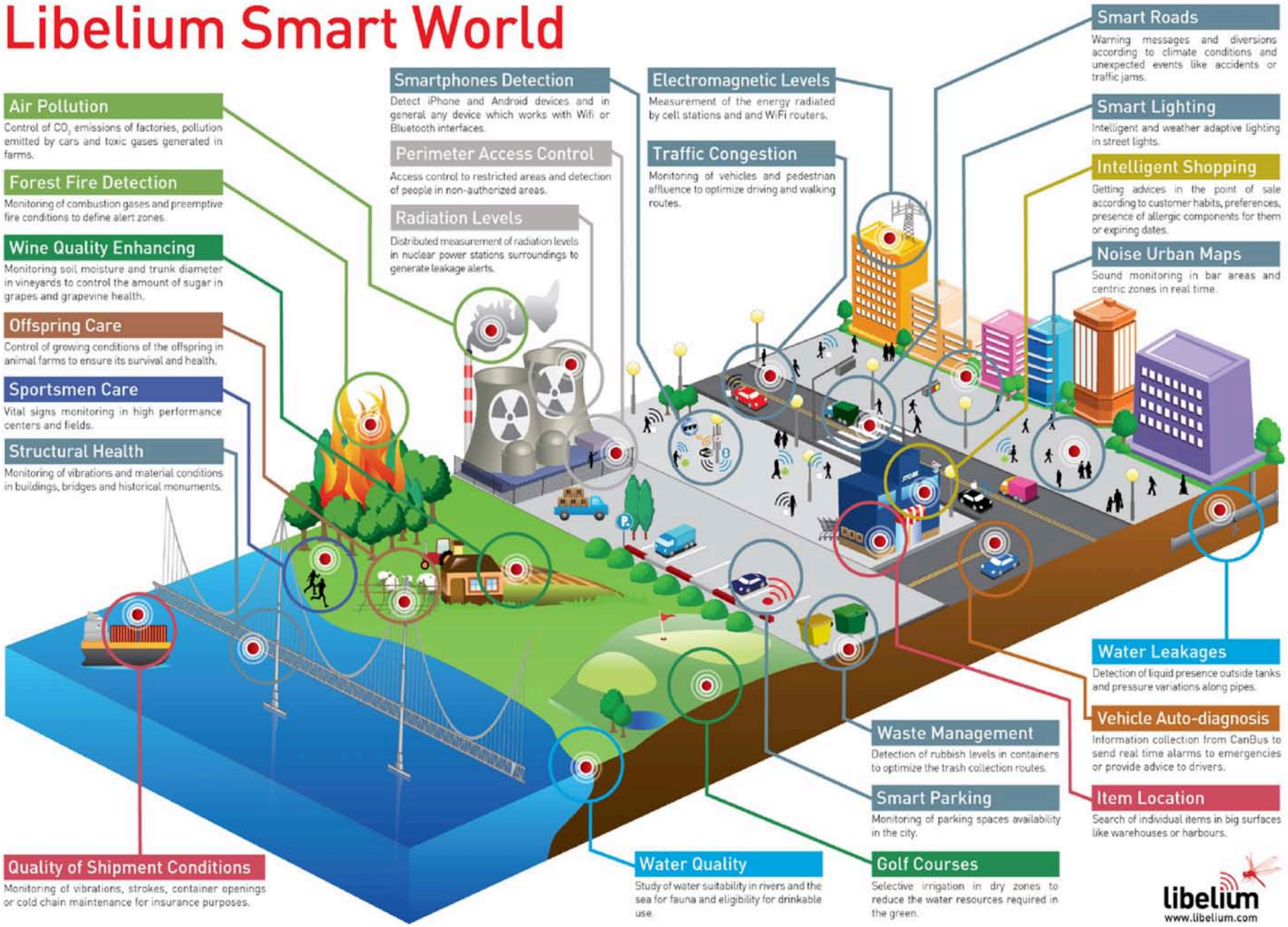

This graphic, courtesy of Spanish company Libelium gives an outstanding insight into the role IoT can and will play in the future. Libelium have developed an enormous range of IoT-based products, particularly in the agricultural, mining and related fields. (www.libelium.com).

then some. Things connect to the internet which would have been unthinkable a decade or so ago. They have become the Internet of Things, almost always abbreviated to "IoT".

You might also see them referred to as "connected devices" and "smart devices" but we'll stick to the IoT moniker.

It may be something as simple as having an on/off switch which can be simply read, or perhaps even controlled, over the internet. Or it may be an incredibly complex piece of equipment with lots of monitoring happening in real time.

Even Governments are taking notice – in their 2015 budget, the UK Government allocated forty million pounds to further research the IoT.

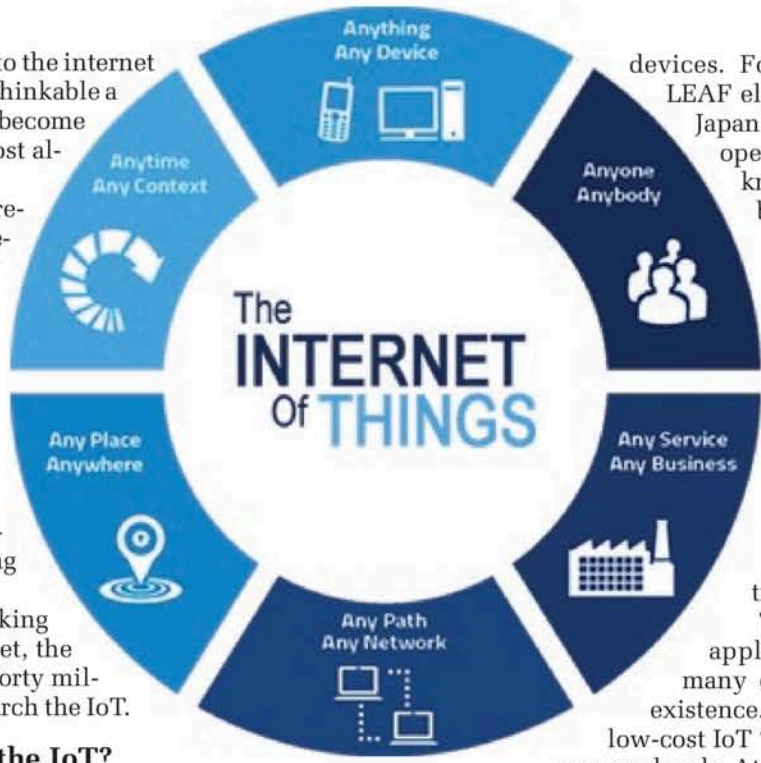

What "Things" are in the IoT?

This is one of the most attractive parts of the IoT – because those "things" can be virtually anything that has the "smarts" to connect to the 'net. That could be anything from a huge building (or even a whole town or city) to a circuit board you can easily fit in your pocket – and just about everything in between.

And if they don't have those smarts, a tiny module – or even a chip – can be attached or embedded which gives them same.

All they need is the ability to collect the required data and assemble it into meaningful packets, then transfer that to the internet.

Smart City, Smart Grids and Smart Energy Management wouldn't be possible without IoT. If you haven't come across those terms yet, just wait a short time!

We've all heard of internet-connected domestic fridges which can report low product levels (and even order replacements in some cases), report power outages and temperatures and even, in some really clever cases, call your mobile phone to tell you that you've left the door open! Really clever? No, actually quite simple for IoT.

But the things can also be much larger – the equipment in complex industrial plants, for example – and much smaller – such as the trackers regularly advertised in Silicon Chip by KCS Trace-me (see outside back cover of this issue).

You should be starting to get the idea that the capabilities of the IoT are unlimited.

Let's bring it back to a personal level: you have a child (or a pet) who is prone to wandering off (or even grandpa with dementia!). Fit them with a tiny device (say on jewellery, a collar or even sewn into their pocket) and you'll never wonder where they have wandered to again! They will tell you, without even knowing they're doing so.

What if grandpa had a pacemaker fitted? Yep, there are now IoT pacemakers! Without having to cut grandpa open again, they let the heart specialist know instantly if something is wrong – with the pacemaker or grandpa!

Vehicle manufacturers are now connecting cars as IoT devices. For example, the Nissan LEAF electric car calls Nissan in Japan every day and reports its operation. Nissan engineers know something is wrong before the driver! Similarly, those fortunate enough to own a Tesla will know their vehicle operating software has been updated without any involvement from them – I believe it's now on version 8 and incorporates many "driverless car" features. And again IoT sends Tesla all the operational data.

There are almost endless applications in agriculture, many of which are already in existence. Stock can be fitted with low-cost IoT "tags" which can operate on many levels. At a minimum, they can operate as the human tracking example above – think of how much time and money would be saved when mustering a large herd of cattle.

At a higher level, the tag could report on the animal's health; even if it was pregnant or calving. Or it could report "market ready" parameters such as weight and fat content. At the same time, each of the dams on the property could be reporting their depth and the volumes of water being pumped. Each gate could be reporting if they were open or closed. The fuel tanks could not only report their levels but could call the fuel agent with an order for replenishment – all without human intervention.

Then there's all the on-farm data which has been traditionally gathered by hand: cropping information, soil moisture content, pH and chemical composition, for example. Now there are IoT applications to do it. (The Spanish company responsible for the graphic overleaf specialises in developing such applications).

We've even seen one robot which traverses fields and identifies weeds (against a record kept somewhere else). If a weed is identified, the robot sprays it – and only it – with a herbicide. Remember, these robots don't require any human intervention.

Getting the data out

We've already mentioned a few types of IoT sensors but there is virtually no limit to what they are measuring/reading and the data they are sending.

Because each Thing is effectively a node on the internet it doesn't take too much imagination (read programming ability!) to work out that the data can be used for whatever the user wants to use it for.

It also allows Things to work together to do certain tasks that they have been programmed for – for example, the same company that supplied the graphic on page 27, Libelium, recently told us the Dutch authorities are using IoT to keep track of users on the hundreds of kilometres of canals, lakes and inland harbours of The Netherlands.

It's not just assisting in navigation, that is getting from point A to point B – paying tolls, for example. IoT can even automatically stop traffic on approach roads and open a lifting bridge as a riverboat or barge approaches and closing it once it has passed.

Costs have been dramatically reduced because of the massive decrease in manned bridges!

Where does the data go?

Answer: anywhere you like! Having the data is one thing, using it is another. Ignoring (for a moment) just how the data gets from point A to point B, it is generally encrypted for security and sent to a server on the Internet – for example, to "The Cloud" (another term still not well understood).

Somewhere else (hence, the Cloud) there is a program running to do something – anything from storing the data in a database which others can query via their device (eg, a notepad computer or mobile phone) or even have an action happen because of that data – "warehouse X is below stock on widget Y – refill".

Usually, IoT relies on wireless connectivity. Sure, you'll find some IoT devices hard-wired but the vast majority rely on wireless, such as WiFi, Bluetooth, ZigBee and cellular, or emerging technologies such as LoRa (see panel) and cellular M2M (machine to machine).

Indeed, it's wireless connectivity which has spawned a large part of the IoT. And conversely, the burgeoning IoT is also responsible for the rapid development of many new wireless technologies such as Sigfox, LoRaWAN, Symphony Link and Ingenu.

IoT in action

In the past, a piece of equipment in a factory might have had a thermostat on it, with an alarm sounded if it got too hot. With IoT, that thermometer has become many active temperature sensors, either flagging temperatures outside operational norms or, more likely, wirelessly reporting temperature data on a continuous basis to a computer in the maintenance area. It could then warn of unusual temperatures as part of that plant's ongoing records.

So IoT simply means things which are able to connect to the Internet and send or receive data. Or more formally, a robust network of connected devices. How many devices? At last count, BILLIONS (but who's counting?)! The analyst firm Gartner says that by 2020 there will be over 26 billion IoT devices. Others say this is way too low – perhaps as many as 100 billion.

In fact, the IoT is already having a major impact on our lives – and this is only going to grow as more and more devices join in.

Just some of the benefits of IoT are:

- remote monitoring and control of equipment
- fault reporting (or better still, potential fault reporting before the fault occurs)
- fault action (self-repair, bypassing, etc)
- advanced data analysis and action
- more agile (and faster) communications networks
- automation
- real-time performance analysis
- reduced costs
- enhanced safety
- tracking "things" – knowing where they should be and/or going where they should be!

About LoRa

One of the more interesting wireless technologies emerging is LoRa. As we mentioned earlier, most people would know the name means Long Range – that's up to about 50km or so line-of-sight (LOS) in non-urban areas – but there is a lot more to it than increased range.

For a start, it's very cheap to not only integrate into Things but is also cheap to use. With so much competition around these days, that's important! But what is it?

LoRa is a radio modulation format that gives longer range than straight frequency-shift-keying (FSK). It uses a particular spread-spectrum technique called Chirp Spread Spectrum (CSS) and it uses forward error encoding in combination with whitening and interleaving, meaning the wireless signal is less prone to interference and/or errors and is therefore cable of being received over a significantly longer distance.

To put that in simpler language, it has been described as a "frequency modulated (FM) chirp". (If you're *really* interested, the LoRa patent can be read in full at **www.google.com/patents/US7791415**).

It uses lower frequencies than WiFi, around 860MHz to 928MHz (depending where you are) with a low transmitter power. Normally the lowest data rates mean the longest range and vice versa.

Because of its very low power requirements, LoRa is ideal in battery-operated IoT devices and has found many users in this area. Indeed the LoRaWAN (LoRa Wide Area Network) specification (owned by Semtech) is intended for wireless battery-operated Things in regional, national and even global networks with data rates between 0.3kb/s and 50kb/s. While that may seem to be fairly low speed, the upper end of the standard can achieve some quite impressive results.

The LoRa alliance is an open, non-profit association of members who believe that the IoT era is now. It was initiated by industry leaders with a mission to standardise Low Power Wide Area Networks (LPWAN) being deployed around the world. LoRaWAN is a global specification created by the LoRa Alliance to drive a single standard for seamless interoperation across the industry.

For experimenters, the good news is that LoRa modules are available for the Arduino Waspmote and the Raspberry Pi, among other platforms.

Key features of LoRa Technology and the LoRaWAN protocol are:

- **Long range** – deep penetration in dense urban environments and deep indoor coverage with much longer range in rural areas.
- **Low cost** – reduces both upfront infrastructure investment as well as ongoing operating cost.
- **Low power** – the LoRaWAN protocol was made specifically for low power and enables multi-year battery lifetime.
- **Standardisation** – LoRaWAN ensures interopability among applications, IoT solutions and telecom operators to speed adoption and deployment.
- **Geolocation** – enables tracking applications without GPS or additional power consumption.
- **High capacity** – supports millions of messages per base station, ideal for public network operators serving many customers.
- **Security** – embedded end-to-end AES128 encryption of data, ensuring optimal privacy and protection against unauthorised access.

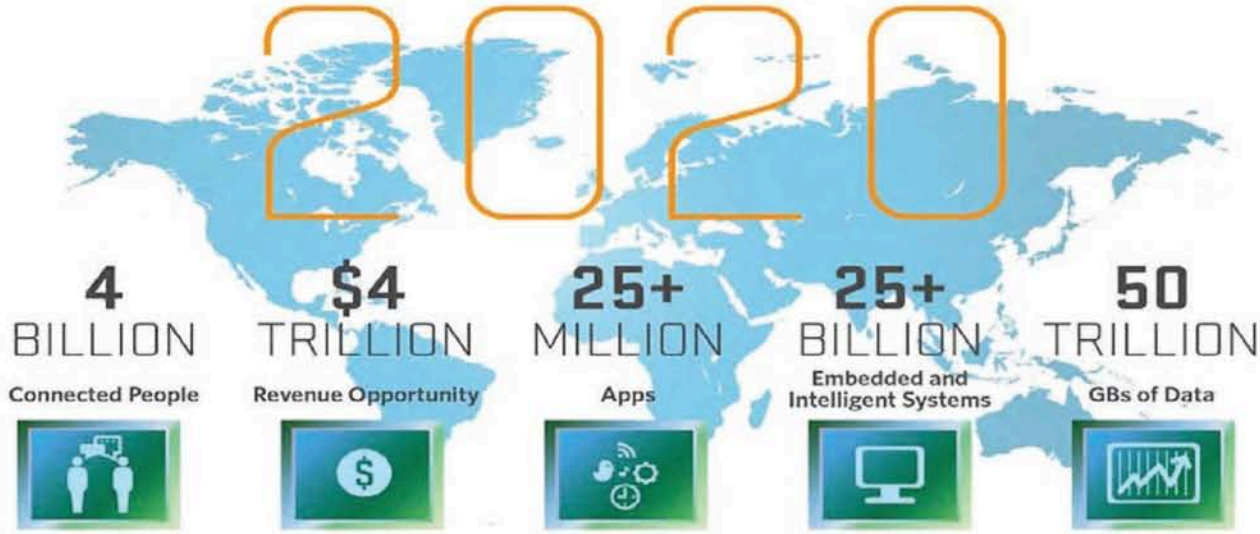

Source: Mario Morales, IDC **If you thought the IoT was big now, here is IDC's forecast for just over three years away!**

- better service – and happy customers!

Naturally, there will be some disadvantages:

- potential for IoT devices (or their links) to be hacked or even infected, either for gain or simply malicious.
- potential for IoT devices themselves to become clandestine surveillance devices, reporting information to someone, somewhere . . .
- fragility – there is increased reliance on a working internet connection – and we all know how (un)reliable it can be!
- reliance on power being always on, which comes at a cost.
- increased bandwidth usage, which comes at a cost.

Other IoT examples

An internet-enabled security camera is a good example of an IoT "Thing". While it may only see a particular scene, many can also detect movement – and send a warning to somewhere else . . . over the internet.

At an "entertainment" level, it's people from all over the world playing games with each other – via the internet, obviously. Then you have the hobbyists and tinkerers working out how to make their "things" do more, work faster, gain an advantage over their opponents . . . and much more.

At a business level, it's about efficiency and security – efficiency in the way materials and goods are handled, transported, sold and used; security in all its iterations from to protection against loss or damage through to timely and accurate financial data. Mission-critical applications can benefit from assurance that every facet is where and when it is supposed to be and is operating exactly as it is supposed to be.

Train cars passing a certain point can report their location and even what they have on board to a waiting receiver (it doesn't even have to be trackside) ready to be promulgated to a network. If a particular car doesn't report in, or if a car that isn't supposed to be in that train does, investigations can begin.

Go larger yet again: sensors placed along a dam wall which measure the strain by sensing tiny changes in their location and feed the data, via the net, to a control room hundreds or even thousands of kilometres away. Beyond a certain tipping point, alarms can be generated warning of possible collapse.

These are just a few of the already-in-place IoT applications. And there are thousands (or more likely hundreds of thousands or even millions!) more – with thousands of new ones every day.

Because of its relatively low cost, businesses and corporations all over the world are jumping on the IoT bandwagon – and probably just as many start-ups help them to do so.

Innovation

IoT applications don't rely on expensive legacy processes or infrastructure. There are so many IoT processes and products emerging that bypass the bottlenecks of the past simply because the information required to do so is instantly available – and available at miniscule cost.

An example? You've all seen those TV programs where a passenger relaxing in the airport bar, misses their boarding call and necessitates having their baggage removed from that flight. In the past, that was a manual search through the luggage of perhaps 300-400 people, with consequent delays in flights. Now, each bag can be tagged to say "here I am!" so it can be offloaded in minutes. And all the other bags can tell sensors their destination ports and be routed correctly.

If you've experienced a lost bag you'll know how incredibly frustrating it can be. So as airlines adopt new IoT technology, every bag will get to where it is supposed to – unless some human interferes and manually re-routes it!

We mentioned safety earlier. One major power utility in the US placed IoT sensors on critical equipment to continually monitor and predict faults.

The data from those sensors (eg temperature, over-voltage, etc) translates into action, preventing blackouts and saving millions of dollars.

Machinery and equipment in any industrial application will wear. IoT can report excess wear and/or failure so the company can determine immediately what needs attention or service, usually significantly in advance of when they'd know "the old fashioned way".

Even if you don't think you're using the IoT right now, just stand by for the IoT explosion!

A "Real World" IoT Application: MySignals Platform

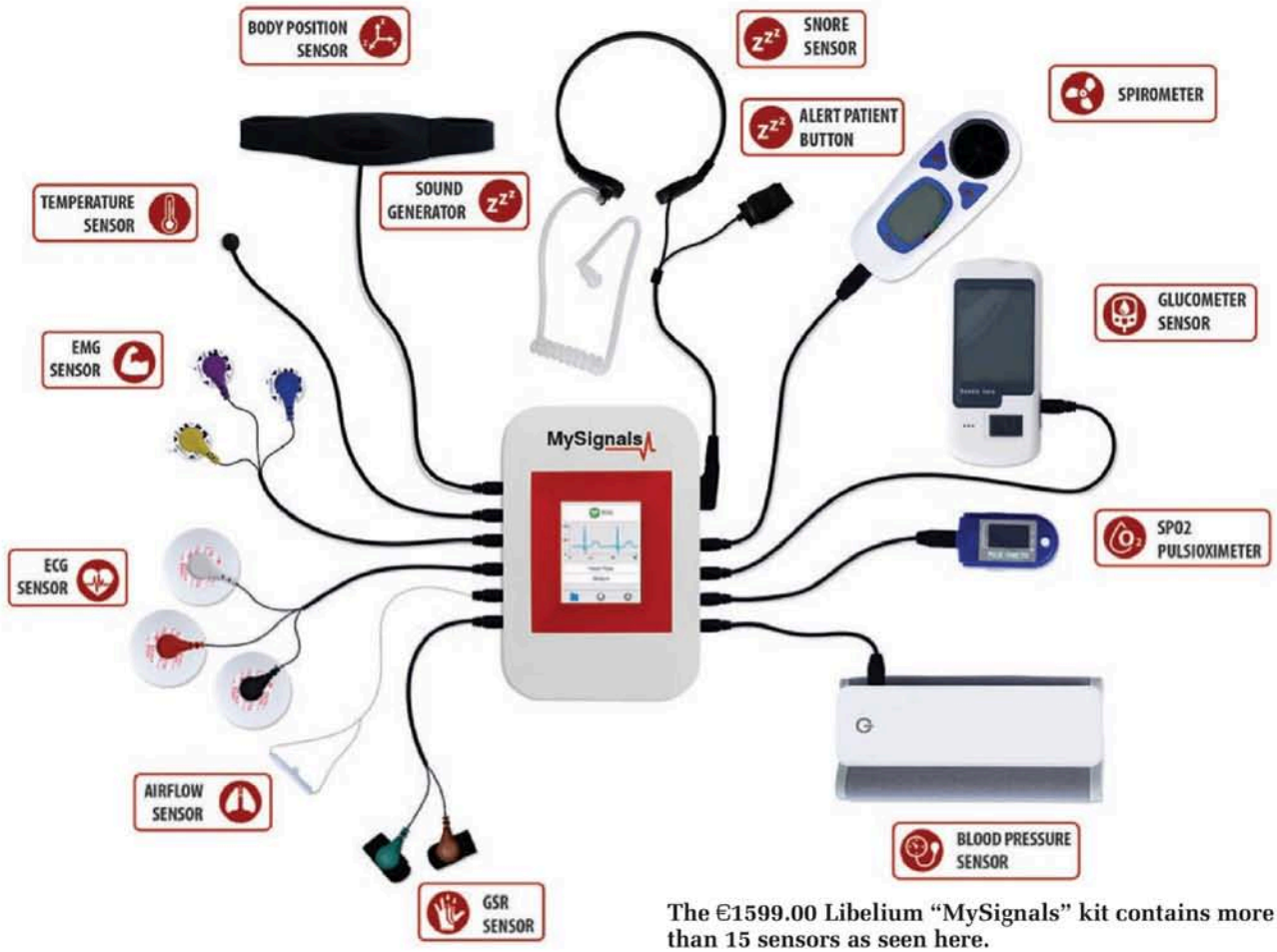

The €1599.00 Libelium "MySignals" kit contains more than 15 sensors as seen here.

As we went to press, an interesting email arrived promoting an IoT device/application which ably demonstrates what the IoT is capable of today.

It's a product called "My Signals" and is described as a development platform for medical devices and eHealth applications.

It measures more than 15 different biometric paramaters which are then sent to The Cloud, ready to be used (despite their all-encompassing disclaimer!) by health care professionals, specialists, researchers, OEM customers . . . or even just to have an ongoing record of your own health.

A device such as this could find a place in a doctor's surgery, with the doctor using as many sensors as appropriate to monitor and read his/her patient's symptoms. The doctor wouldn't even need to record the data because it would all be done automatically in that patient's file, to be either reviewed later or, if necessary, to be referred to a specialist for opinion.

Conversely, it could be used in the patient's home (especially remote patients) with the data sent to a central location for review. When you think about it, the applications are endless.

As they say, "MySignals changes the future of medical and eHealth applications".

"MySignals" is merely the starting point allowing both software and hardware developers to use the platform to think of a whole range of innovations in the health care field. App developers (who don't want or need to cope with hardware issues) have a quick prototyping platform to work with. Conversely, hardware developers, researchers and makers have complete access to the MySignals PCB and electronics.

MySignals has a Libelium IoT core with CE, FCC and IC certification. It includes cloud access along with Android and iPhone Apps. The hardware is also compatible with Arduino SDK so developers don't have to re-invent wheels. Data gathered by MySignals is encrypted, then sent to the developer's private account at the Libelium Coud. One year of free Cloud storage and history visualisation is included with the MySignals.

There are models using WiFi, LoRa and cellular (3G/4G).

Specific health research users can choose from any of the 15+ sensors used to monitor 20 biometric signals that are currently available, or can design and build new sensors which particularly suit their field. Current sensors include everything from scales and ECG monitors through to temperature, blood glucose and blood pressure monitors.

The information about MySignals didn't come direct from Libelium but from Cooking Hacks, an associate, who specialise in electronic kits and components for makers, universities, high schools and students who want to be a part of the IoT revolution.Learning kits start at about $AU24.00

You can contact them at: www.cooking-hacks.com; email info@cooking-hacks.com or phone +34 (Spain) 976 547 492. SC

One for the grey nomads

50A Battery Charger Controller

For 12/24V "house" batteries

Are you one of the many thousands doing the grand trek around Oz in an RV, caravan or campervan? Then you will know the problems with trying to charge up your "house" batteries during a long trip. This heavy-duty charger controller will enable you to charge those batteries much more quickly using your portable generator and a low-cost 40A or 50A charger.

Even if your RV, caravan or campervan has a couple of solar panels on the roof, getting your "house" batteries (ie, the one[s] in the aforementioned RV, caravan or camper, as distinct from your vehicle battery) quickly up to charge can be a real problem, especially if you arrive at the remote campsite late in the day.

If you want power, there is no alternative to dragging out your portable generator and using it to charge your batteries.

The big problem is that the limited 12V, typically 5A DC output from the generator's inbuilt charger can take forever to bring house batteries up to charge.

That means running the generator for many hours – and that is not desirable at all.

The idea for this project came to us from a "grey nomad" some time ago. Instead of trying to charge from his generator's 12V output, he suggested using a cheap 40A charger, powered by the 230VAC from the generator. That would bring the batteries up to charge in a fraction of the time. Consequently, the generator would only need to run for a much shorter time.

Design by JOHN CLARKE

What a great idea! The portable generator is used much more efficiently, it uses a *lot* less fuel and you don't have to listen to the generator droning away for hours on end (nor do the other people who may be camping at the same site).

However, there is a drawback with the idea (which was noted by the "grey nomad"). If you don't monitor the battery voltage closely, there is a considerable risk of overcharging and ultimately, boiling the batteries.

A multi-stage charger won't necessarily solve this since, depending on its design, during the absorption phase it may hold the battery at a high enough voltage for long enough to cause vigorous boiling of the electrolyte.

There is even a danger of a battery explosion with the emission of hydrogen during over-charging.

Our project removes those risks. It monitors the battery while it is being charged and when

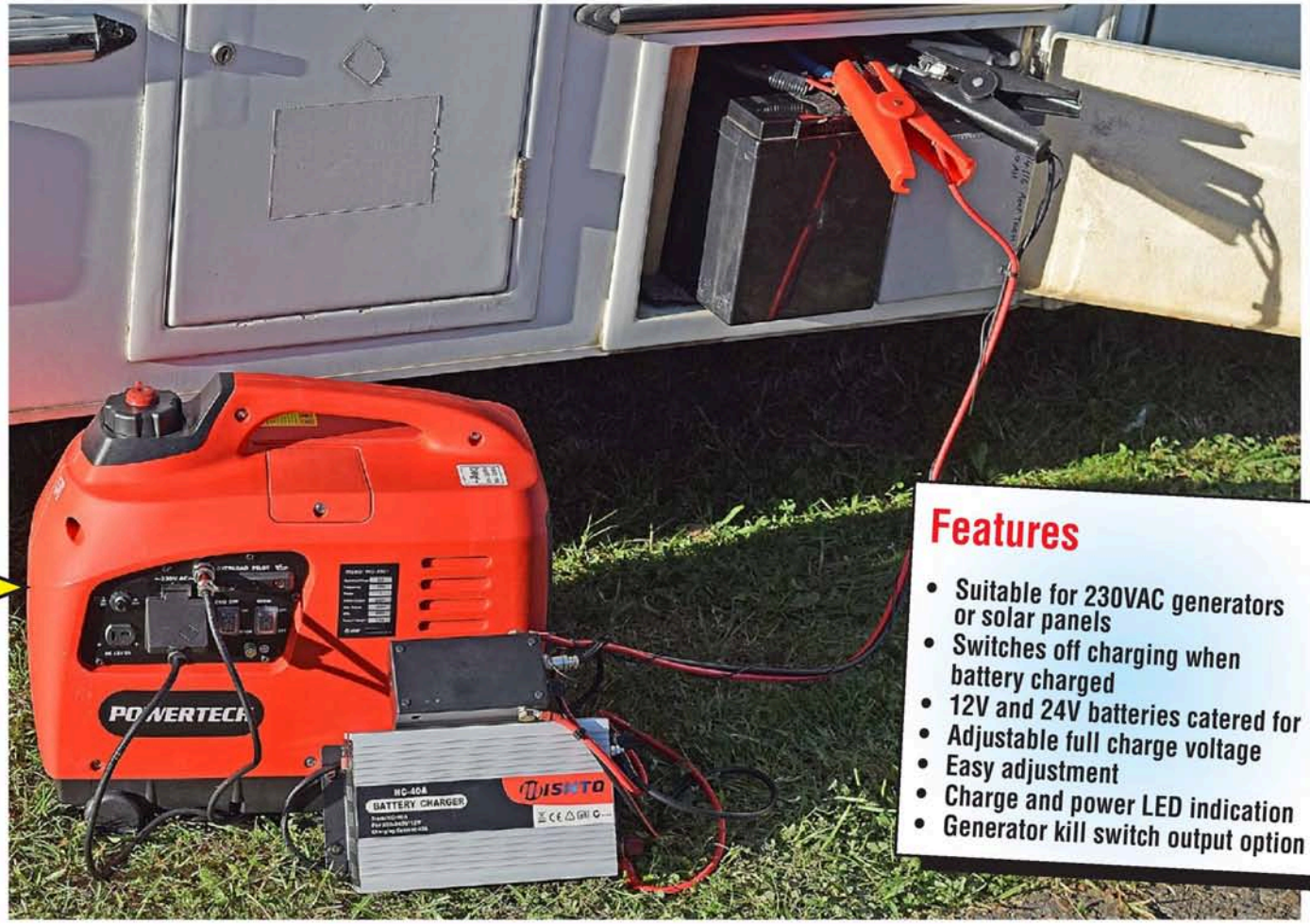

Features

- Suitable for 230VAC generators or solar panels
- Switches off charging when battery charged
- 12V and 24V batteries catered for
- Adjustable full charge voltage
- Easy adjustment
- Charge and power LED indication
- Generator kill switch output option

the voltage comes up to a preset value, say 14.4V, it disconnects the charger.

Better still, about five seconds after that, it switches off the generator to restore the serenity.

And best of all, it removes the need to watch the batteries yourself, so you can get back to the more serious campsite task . . . of relaxing and enjoying yourself!

We should note that many modern switchmode chargers do incorporate proper 3-state or multi-state charging and so they may safely terminate the charge in a float condition.

However, if you have large house batteries, say 200Ah or more, then even with a 40A charger it will take many hours to bring them up to full charge. In that case, you might elect to only bring the batteries up to the "bulk charge" state, then terminate the charge and switch off the generator. Our Charger Controller will allow you to do that.

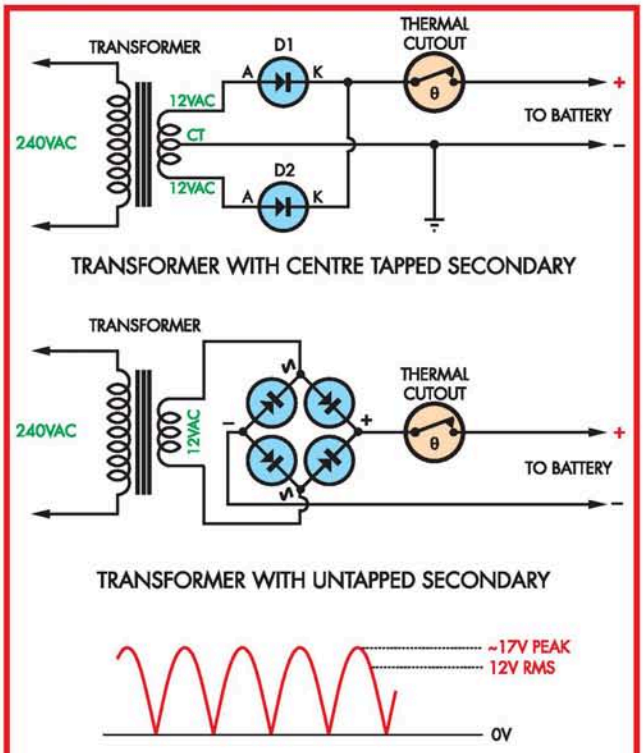

Fig.1: most simple battery chargers *are* this simple, with only a transformer, rectifier and thermal cutout. It's the peak voltage that actually does the charging.

Of course, this 50A charger controller can be used if you *do* have mains power on the campsite. Then you don't need to fire up the generator – just hook up the high current charger and our Charger Controller to your house batteries and you can be sure that they will be brought up to full charge while you enjoy your idyllic surroundings.

Naturally, you don't have to be a grey nomad on the grand tour to consider building our Charger Controller. It can be used at any time with any basic charger which does not have "end-of-charge" detection; most lower-priced ones don't.

So why don't basic battery chargers limit charging when the battery reaches full charge? The answer is that most, especially the lower-cost models, are *too* simple: all most have is a transformer and rectifier diodes.

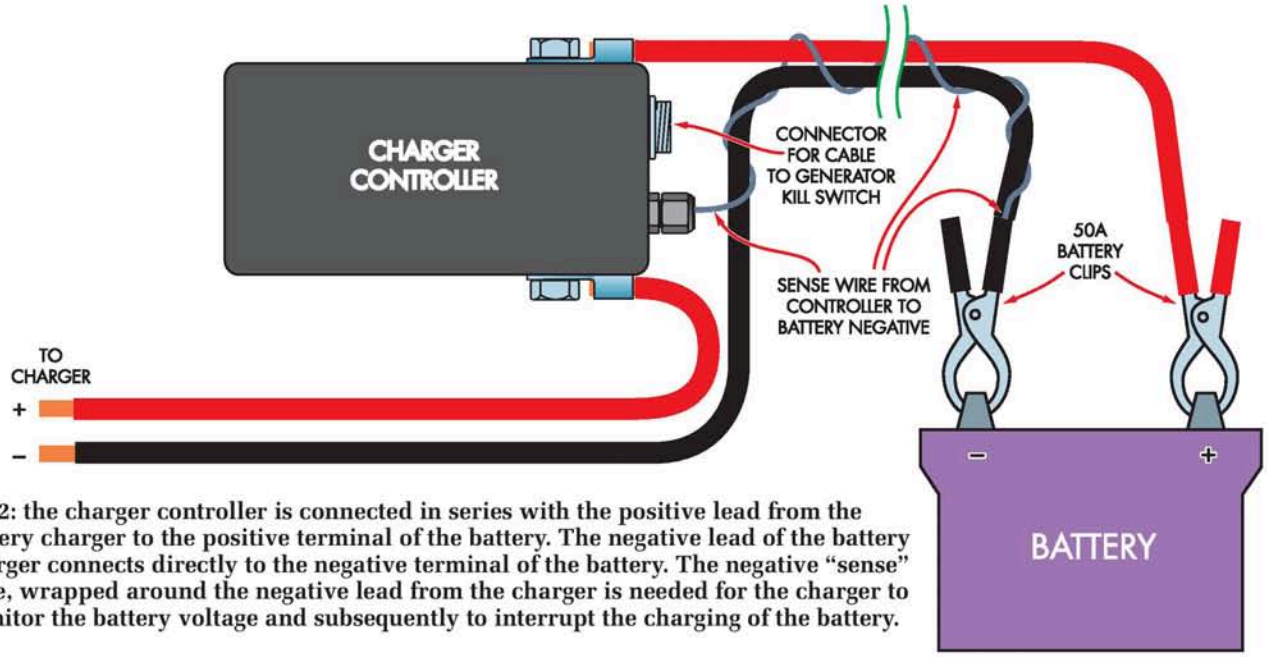

Fig.2: the charger controller is connected in series with the positive lead from the battery charger to the positive terminal of the battery. The negative lead of the battery charger connects directly to the negative terminal of the battery. The negative "sense" wire, wrapped around the negative lead from the charger is needed for the charger to monitor the battery voltage and subsequently to interrupt the charging of the battery.

Fig.1 shows two typical battery charger circuits, one using a centre-tapped transformer and two rectifier diodes or a single winding transformer with a four-diode bridge rectifier.

Both feed rectified but unfiltered DC to the battery.

The batteries are quite happy to be charged with this pulsating DC; the problem occurs when charging is complete. The charger doesn't know so keeps on pushing current in. The battery overcharges and . . .

Similarly, if you have a bank of solar panels to charge a 12V or 24V battery, there is the same risk of over-charging. Our Charger Controller can also prevent that from happening.

Circuit concept

In essence, the 50A Charger Controller is connected in series with the positive lead of the charger to the battery. The controller has a 60A automotive relay which disconnects the charger when the battery comes up to charge, all under the control of a PIC12F675 microcontroller. A second, smaller relay shorts a pair of wires from the kill switch on the generator. So it's a pretty simple concept, as shown in Fig.2.

Fig.3 shows the full circuit. You can see the red conductor from the charger positive output at the top right-hand corner of the diagram. It passes through the contacts of the 60A relay and then out to the positive terminal of the battery being charged. The output to the battery is also fed to an LM2940CT-12 3-terminal 12V regulator which produces 12V to power the two relays, RLY1 & RLY2.

On the left-hand side of the circuit, the charger output is fed via diode D3 to an LM317 adjustable 3-terminal regulator, which provides 5V DC to run the PIC12F675 microcontroller, IC1.

The PIC monitors the battery voltage to detect the end-of charge and it controls the relays and drives the charge indicator, LED2.

12V or 24V batteries

This controller works with 12V or 24V chargers and lead acid batteries. The battery voltage is measured using a voltage divider comprising a 100kΩ resistor from the battery positive and two series-connected 22kΩ resistors connecting to 0V. Total resistance is 144kΩ. The 22kΩ resistors provide a reduced voltage suitable for IC1 to measure battery voltage at its AN1 input. IC1 requires a voltage at its AN1 input of less than the supply of 5V and the voltage divider caters for both 12V and 24V batteries by changing over a jumper link that selects one of two positions in the voltage divider. Diode D4 protects against reverse battery connection.

In the 12V position, the divider connection with the jumper (JP1) in the 12V position, comprises a 44kΩ resistance (with the two 22kΩ in series) and the 100kΩ resistor with a division ratio of 44/144. This reduces 12V down to 3.666V. At full charge, the battery is around 14.4V and so the divided voltage is 4.4V.

For the 24V position, the jumper selects the lower 22kΩ resistor and so the division ratio is 22/144. The reduced voltage becomes 3.666V when the battery is at 24V. At full charge of 28.8V, the divided voltage is once again 4.4V.

Note that the reduced voltage that is applied to the AN1 input of IC1 is the same for both 12V and 24V batteries. This means that IC1 can detect full charge for either a 12V or 24V battery just by changing the position of link JP1.

Instead of using a jumper shunt to select 12V or 24V, an SPDT toggle switch on the front panel could be used in its place.

The battery is deemed to be fully charged when the AN1 input rises above the AN0 input. The AN0 input is connected to a voltage divider across the 5V supply, comprising a 5kΩ trimpot

SPECIFICATIONS

Supply: ..... 12V or 24V battery charger
Charger Current: ..... Up to 50A
Charge voltage: ..... Adjustable from 13.87V to 16.36V for 12V battery and 27.74V to 32.73V for 24V battery
Battery drain: ..... With charger off, ~10mA
Kill switch output: ..... Contacts close for 5s, 5s after charging is completed

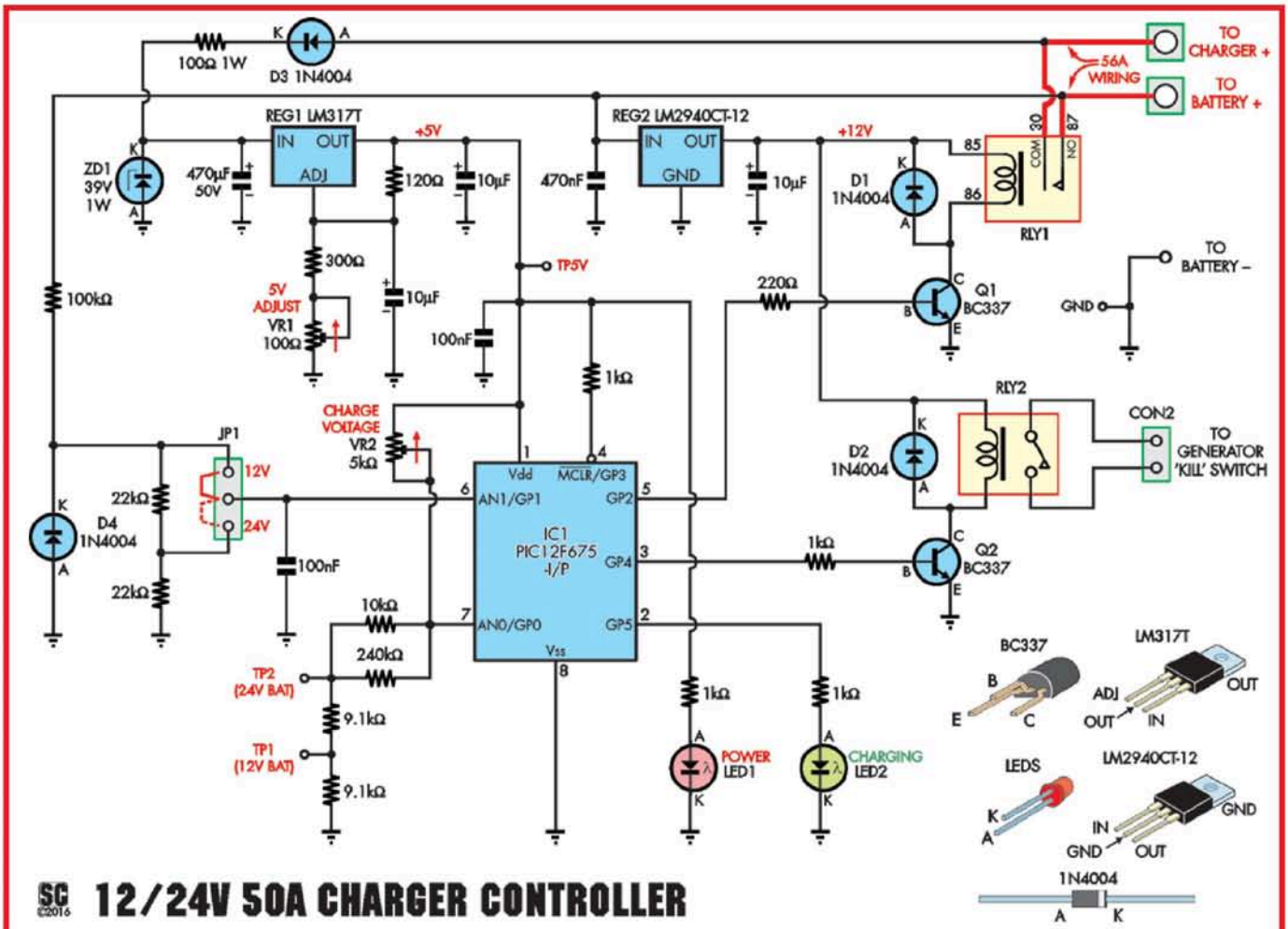

SC 12/24V 50A CHARGER CONTROLLER

Fig.3: the microcontroller in this circuit (IC1) primarily acts as a comparator. It compares a sample of the battery voltage (at its AN1 input, pin 6) with a reference voltage its AN0 input, pin 7. When the voltage at pin 6 rises above that at pin 7, IC1 switches on transistor Q1, to actuate relay RLY1 and interrupt the charge.

(VR2) and the associated resistors in series to 0V.

VR2 is adjusted to set the required full charge voltage for the battery. For a 12V battery, VR2 is adjusted to obtain 1.44V, measured between TP1 and GND, resulting in 4.4V at the AN0 input. For a 24V battery, (with a full charge voltage of 28.8V) set VR2 for 2.88V between TP2 and GND.

Note that the GND terminal is connected to the negative terminal of the battery. Without this connection, the Charge Controller cannot work.

Relay RLY1 is controlled by the GP2 output of IC1 and this drives the base of transistor Q1 which turns on the relay.

Relay RLY2 is controlled by via the GP4 output and transistor Q2. Diodes D1 & D2 are included to clamp the voltage spikes which are generated when the relays are turned off. If the diodes were omitted, there would be a risk that Q1 & Q2 could be damaged by the high voltage spikes.

Charging sequence

IC1 monitors the battery at the AN1 input and switches on relay RLY1 if the battery voltage is over 9V (or over 18V for a 24V battery). The relay contacts then pass the charging current from the charger to the battery.

When the battery reaches full charge, the relay switches off to disconnect the charger. The battery is then continuously monitored and relay RLY1 will be switched on again if the battery voltage drops to 12.5V or below, for a 12V battery, or below 25V for a 24V battery.

Of course, if the charger is fed by a portable generator and the kill switch lead is connected, the generator will have been turned off and will have to be manually restarted for charging to re-commence.

The charging indicator (LED2) flashes once each second during charging and stays fully on once the battery is fully charged. LED2 is off when the battery is disconnected (ie, below 10V or 20V). LED1 is on while ever the charger is on.

Kill switch relay

Relay RLY2 is included to switch off the generator once the battery charger has been disconnected by the main relay, RLY1. Relay RLY2 is switched on five seconds after RLY1 switches off, for five seconds. The kill switch lead is connected to a socket (which needs to be installed) on the generator, in parallel with the contacts of the generator's engine (kill) switch.

Construction

All the components of the Charger Controller are assembled onto a PCB coded 11111161 and measuring 122 x 53.5mm. It is housed in a UB3 plastic case measuring 130 x 68 x 44mm.

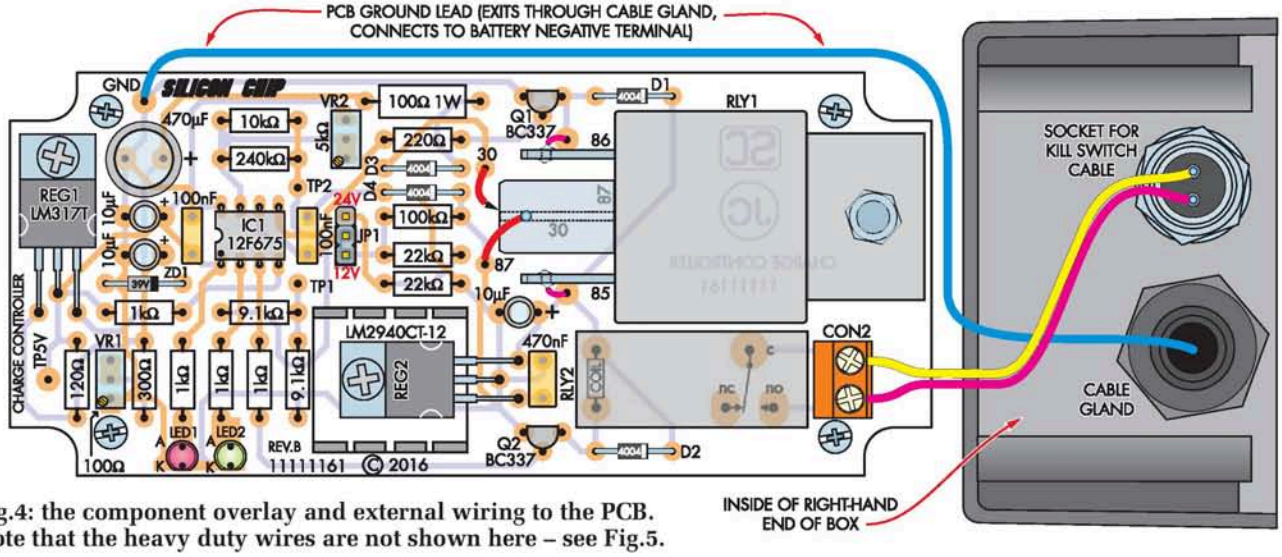

Fig.4: the component overlay and external wiring to the PCB. Note that the heavy duty wires are not shown here – see Fig.5.

Before installing any components on the PCB, place it in the plastic case and mark out the position for each of the corner mounting points on the base.

Fig.4 shows the component overlay of the PCB and the battery negative terminal and the kill switch socket. Fig.5 shows the heavy duty wiring for the connections to the battery and charger.

You can begin assembly by installing the resistors, using a multimeter to check the value of each before inserting it. (The table also shows the colour codes for each resistor value). Diodes D1-D4 and the zener diode ZD1 can be installed. These must be oriented as shown and be careful not to mix the diode types.

(By the way, if you don't want to use the kill switch facility, you can omit the components associated with it, ie, connector CON2, the 2-pin socket, relay RLY2, diode D2, transistor Q2 and its 1kΩ base resistor). On second thoughts, you probably should install them because after you use it, you'll wonder why you didn't have the auto-kill facility!

PC stakes can then be installed at test points GND, TP5V, TP1, TP2 and the relay terminal connections labelled 30, 87, 85 and 86 and the four LED connections.

Install the 3-way header for JP1. (Normally a jumper shunt is placed on the 12V or 24V battery position). If you intend to use the Charger Controller for 12V and 24V batteries, you may prefer to install an SPDT switch instead. Wire the switch directly to the header or via a 3-way plug.

Make sure you orient the socket for IC1 correctly and then install the capacitors. The electrolytic types must be oriented with the shown polarity.

The two 3-terminal regulators are mounted horizontally onto the PCB with their leads bent to fit into the PCB holes. REG2 is installed onto a small heatsink. Both regulators are secured using an M3 x 6mm screw and M3 nut.

The trimpots can be mounted next. VR1 is 100Ω (coded 101) and VR2 is 5kΩ (coded 502). Make sure they are oriented with the adjusting screw as shown in Fig.4; that gives increasing voltages with clockwise rotation of the adjustment screws.

Relay RLY2 goes in next but leave the main relay, RLY1, until the heavy duty wiring is done.

Next, install the two LEDs. We mounted ours so that the top of the LEDs are 34mm above the PCB, which makes them visible through holes in the top lid of the case.

Before installing IC1, we recommend adjusting trimpot VR1 for a 5V output. To do this, connect a 12V supply between GND and the anode of diode D3. Then adjust VR1 for a reading of 5.0V between GND and TP5V.

If you intend to program IC1 yourself, hex file 1111116A.hex can be downloaded from the SILICON CHIP website (PICs for this project purchased from SILICON CHIP will already be programmed). Install the programmed PIC into its socket, making sure it is oriented correctly.

Before installing RLY1, the terminals numbered 30 and 87 will need to be wired to the

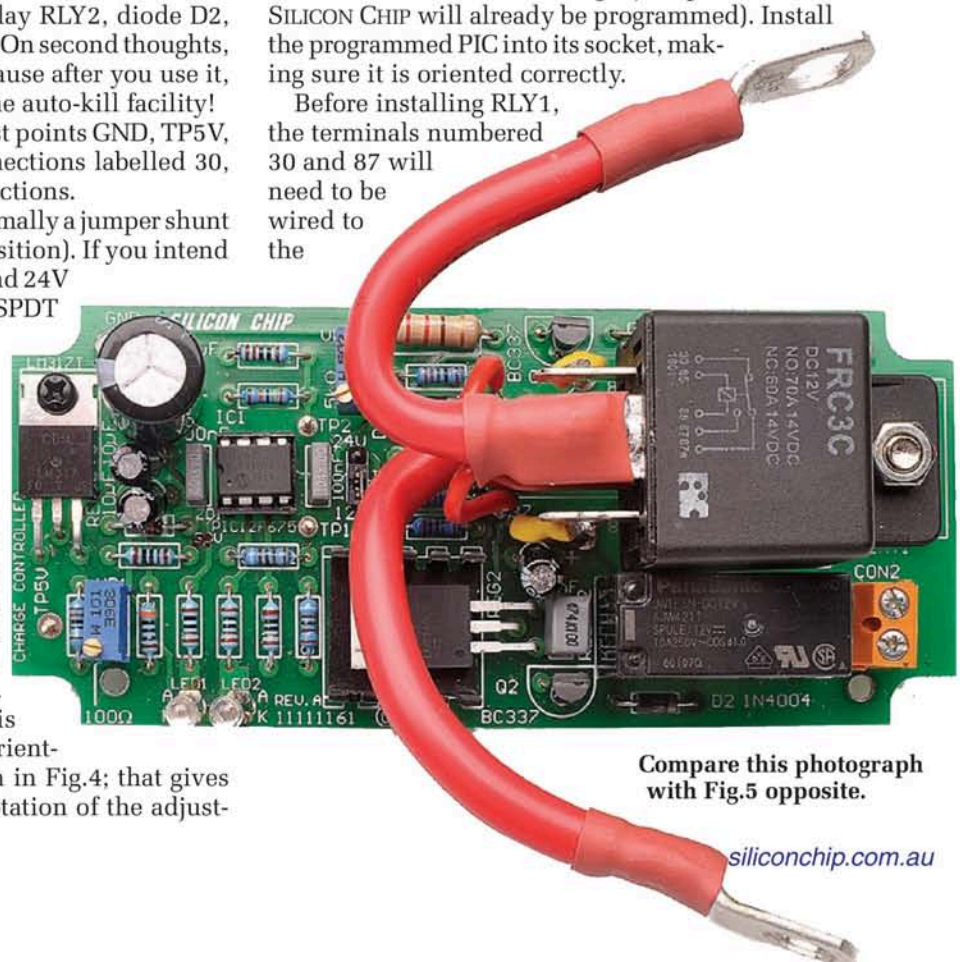

Compare this photograph with Fig.5 opposite.

56A red cable.

Cut two 90mm lengths of the cable and strip back the ends of insulation by about 5mm. Solder or crimp (or crimp and solder) one end of each wire to a large eyelet connector. The other ends of the cable are soldered to terminals 30 and 87.

Note that the soldering to the No.30 relay terminal should be made on the side that is near to the No.86 terminal to avoid any possible shorting to the No.87 PC stake on the PCB. Wire as shown in Fig.6. At the same time, solder short (30mm) lengths of hookup wire to each of the 30, 85, 86 and 87 terminals ready to solder to the PC stakes on the PCB. Cover the bare terminals with 10mm diameter heatshrink tubing and solder the hookup wires to the PC stakes before securing the relay with an M5 bolt and nut.

The PCB is mounted on four 6.3mm standoffs at each corner of the PCB. Use the M3 x 5mm pan head screws to secure to the PCB. If you are wiring the kill switch output, its socket can be installed on the end of the case now.

Drilling the case

Drill out the four 3mm corner mounting holes in the base of the case where marked previously. Countersink the holes if you intend to use countersunk screws. Drill out holes in the sides for the two M8 screws and the cable gland. You may need to use a reamer to open out to the required diameter if you do not have a drill large enough.

The centre of the holes need to be near to the top edge of the box but no closer than 12mm from the top. See Fig.5 for details.

As previously mentioned, the battery charger red (positive) wire for the positive connection on the battery needs to be cut and each end terminated to a large eyelet. These attach to the Charger Controller, as shown in Fig.2. The sense wire from negative battery charger clip is passed through the end of the case via a cable gland. The wire wraps around the 0V charger wire and is connected to the charger's 0V battery clip. You should be able to solder or crimp the sense wire to the battery clip or connect it via a crimp eyelet that is attached to the battery clip with a screw and nut.

Panel label

Front panel artwork can be downloaded from www.siliconchip.com.au We have provided two versions: one as we show overleaf and the other with provision for a 12V/24V battery switch.

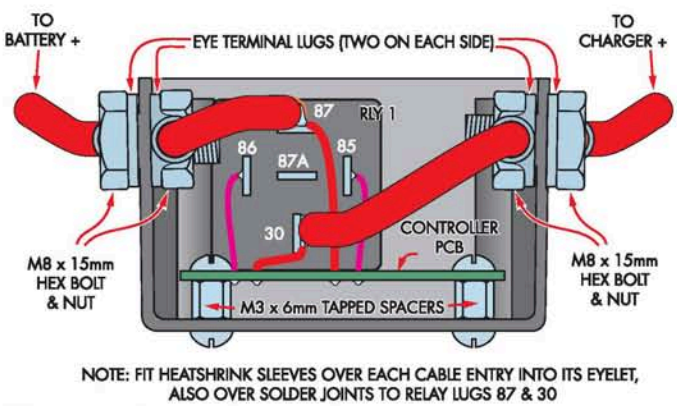

Fig.5: this diagram shows the heavy-duty cables running from the relay (RLY1) to the eye terminal lugs, thence to the charger and the battery.

Parts list – 50A Charger/Controller

1 PCB coded 11111161, 122 x 53.5mm
1 UB3 plastic case, 130 x 68 x 44mm
1 panel label, 120 x 60mm
1 12V 60A automotive relay (Jaycar SY4074, Altronics S4339) (RLY1)
1 SPDT 12V 10A relay (Jaycar SY4050, Altronics S4170A) (RLY2)
1 2-way screw terminal, 5.08mm spacing (CON2)
4 eye terminals with 8mm eyelet hole, for 10mm^2 wire (Jaycar PT-4936)
1 180mm length of 56A red automotive cable
1 2m length of medium duty black hookup wire
1 TO-220 heatsink, 19 x 19 x 9.5mm
1 8-pin DIL IC socket
1 cable gland for 3-6.5mm diameter cable
1 3-way header with 2.54mm spacings (JP1)
1 pin header shunt (for JP1)
1 SPDT toggle switch (S1) (optional – used instead of JP1 shunt)
2 2-pin chassis-mount male microphone sockets (Jaycar PP-2013 or equivalent)
2 2-pin female microphone plugs (Jaycar PS-2014 or equivalent)
2 M8 x 16mm bolts and nuts (NB: NOT PASSIVATED)
1 M5 x 10mm bolt and nut (to secure RLY1)
4 M3 tapped 6.3mm standoffs (for PCB mounting)
8 M3 x 5mm pan head screws (or 4 M3 x 5mm countersunk and 4 M3 x 5mm pan head) (for PCB mounting)
2 M3 x 6mm pan head screws (for REG1 and REG2)
2 M3 nuts (for REG1 and REG2)
12 PC stakes
1 200mm length of red 10mm diameter heatshrink tubing
2m (or more) of double-sheathed 2-core cable (for kill switch cable from charger to generator)

Semiconductors

1 PIC12F675-I/P microcontroller programmed with 1111116A.hex (IC1)
1 LM317T adjustable regulator (REG1)
1 LM2940CT-12 low dropout 12V regulator (REG2)
2 BC337 NPN transistors (Q1,Q2)
1 39V 1W zener diode (ZD1)
4 1N4004 1A diodes (D1-D4)
1 3mm red LED (LED1)
1 3mm green LED (LED2)

Capacitors

1 470µF 50V PC electrolytic
3 10µF 16V PC electrolytic
1 470nF 63V or 100V MKT polyester (code 473)
2 100nF MKT polyester (code 103)

Resistors (0.5W, 1%)

1 240kΩ	1 100kΩ	2 22kΩ	1 10kΩ	2 9.1kΩ
4 1kΩ	1 300Ω	1 220Ω	1 120Ω	1 100Ω 1W

1 100Ω multi-turn top adjust trimpot (VR1)
1 5kΩ multi-turn top adjust trimpot (VR2)

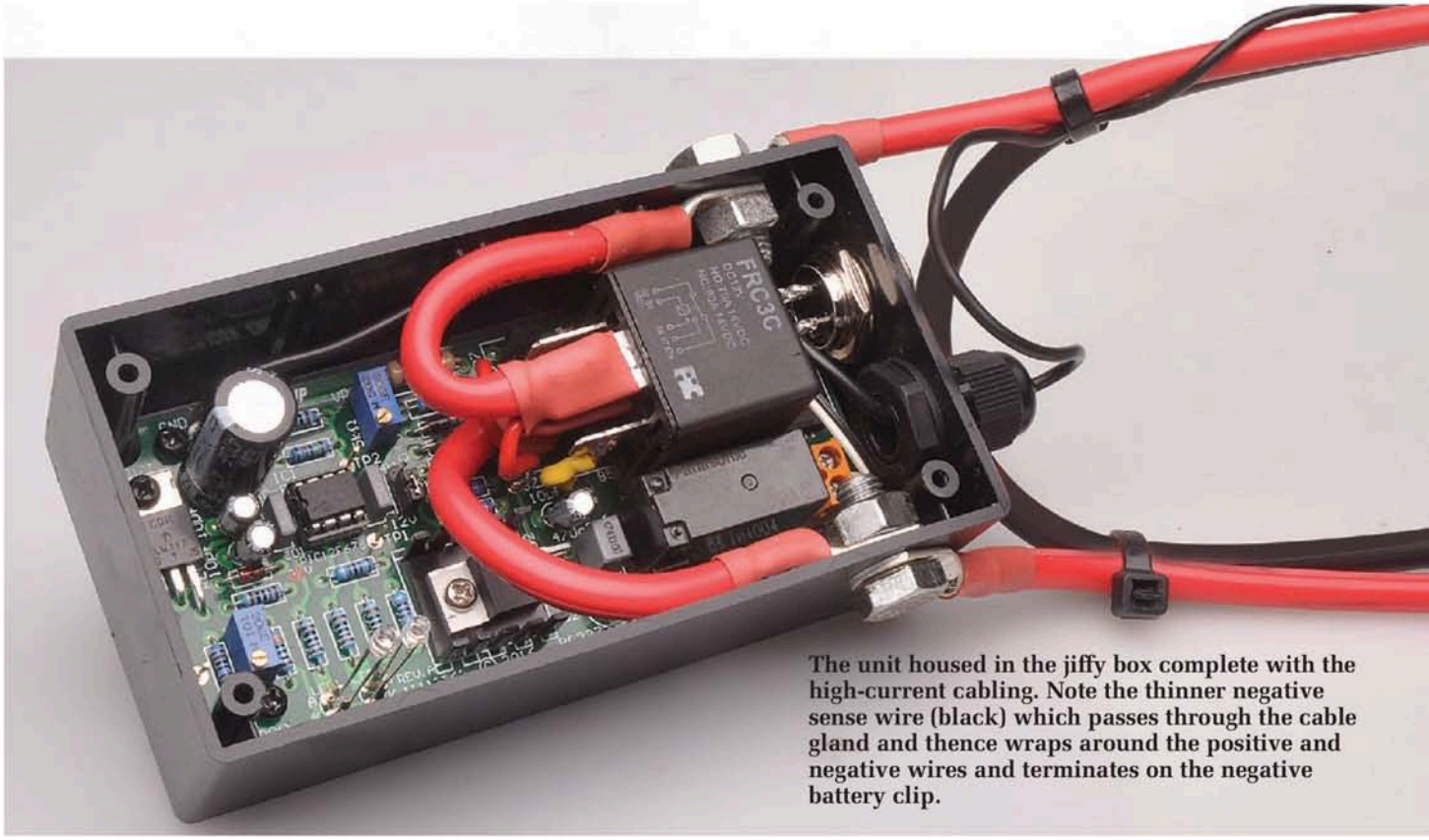

The unit housed in the jiffy box complete with the high-current cabling. Note the thinner negative sense wire (black) which passes through the cable gland and thence wraps around the positive and negative battery clip.

You have several options for producing a front panel label. One is to print it onto clear overhead projector film, using film suitable for your type of printer, and as a mirror image so the printed side is protected against the lid. With a black lid you need to attach the label with a light coloured silicone sealant, so the printing can be seen against the silicone.

Alternatively, you can print onto an A4-sized synthetic "Dataflex" sticky label that is suitable for inkjet printers or a "Datapol" sticky label for laser printers. (Google "Dataflex" or "Datapol" for more information).

Then affix the label using the sticky back label adhesive and cut out the required holes with a hobby knife.

Setting the full-charge voltage

As mentioned, you would typically set the voltage at TP1 and TP2 to 1.44 and 2.88V. That's gives a full-charge voltage of 14.4V for a 12V battery and 28.8V for a 24V battery.

However, the manufacturer of the battery you are using may recommend a higher (say 14.8V) or a lower (say 13.9V) voltage for a 12V battery (and twice those figures for a 24V battery) and it might need to be reduced for elevated temperatures. Check with the manufacturers' specifications for details on how much reduction with temperature is required.

You can check the charge voltage by measuring the battery voltage as it reaches full charge and charging stops and the charge LED continuously lights.

If you missed the full charge point, switch off the charger and then reapply power and measure the battery again at the point where charging ceases. Increase the voltage setting for TP1 or TP2 if the battery charge voltage is set too low.

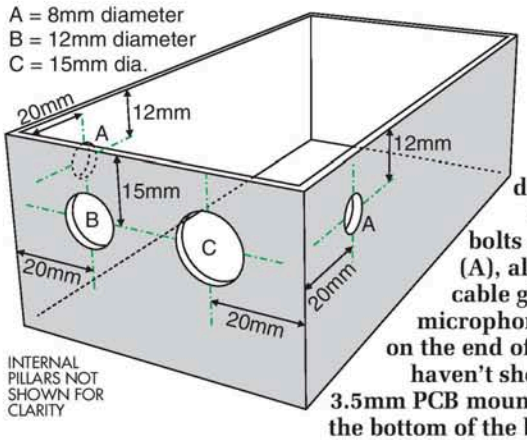

Fig.6: drilling detail for the 8mm bolts on each side (A), along with the cable gland (B) and microphone socket (C) on the end of the box. We haven't shown the four 3.5mm PCB mounting holes in the bottom of the box – use the PCB itself as a template for these.

Resistor Colour Codes

	No.	Value	4-Band Code (1%)	5-Band Code (1%)
❑	1	240kΩ	red yellow yellow brown	red yellow black orange brown
❑	1	100kΩ	brown black yellow brown	brown black black orange brown
❑	2	22kΩ	red red orange brown	red red black red brown
❑	1	10kΩ	brown black orange brown	brown black black red brown
❑	2	9.1kΩ	white brown red brown	white brown black brown brown
❑	3	1kΩ	brown black red brown	brown black black brown brown
❑	1	300Ω	orange black brown brown	orange black black black brown
❑	1	220Ω	red red brown brown	red red black black brown
❑	1	120Ω	brown red brown brown	brown red black black brown
❑	1	100Ω*	brown black brown brown	brown black black black brown
		*1W		

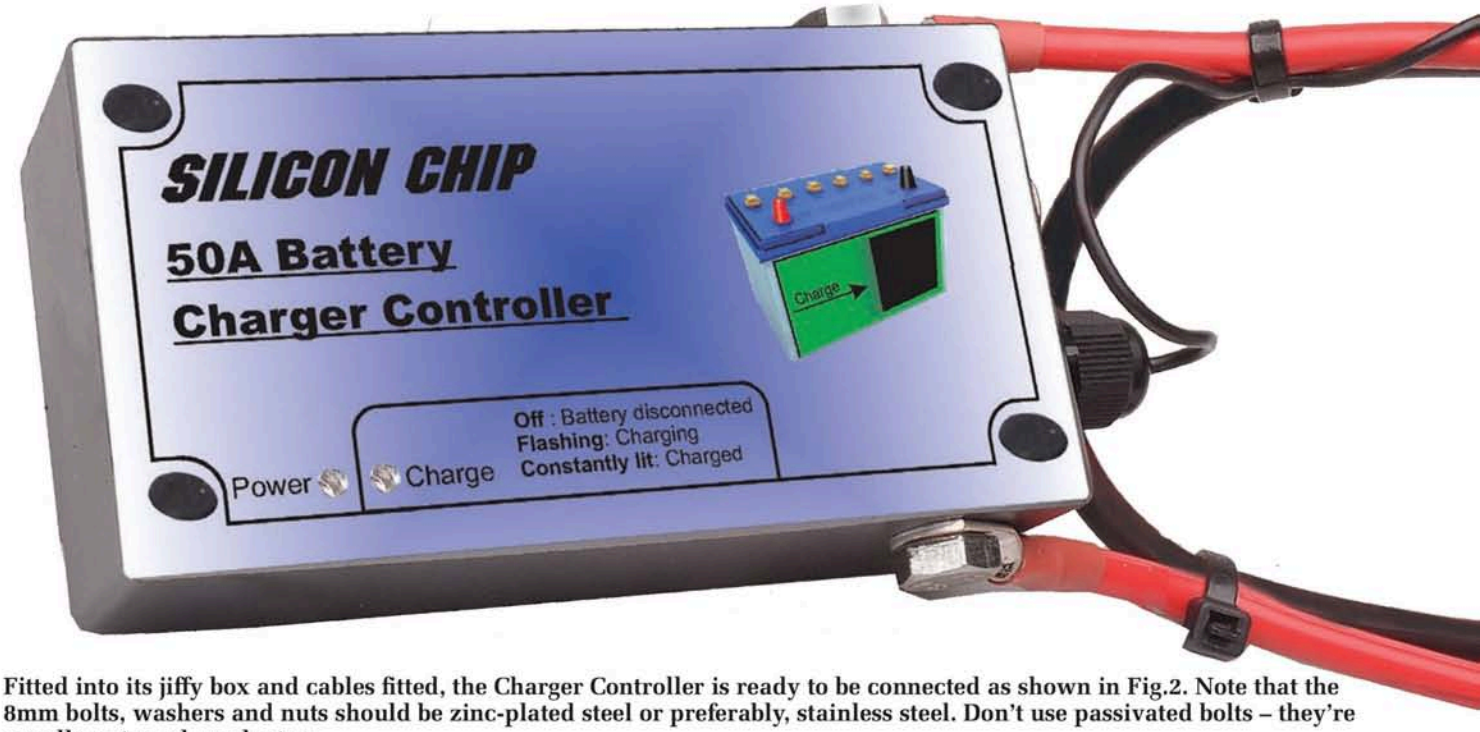

Fitted into its jiffy box and cables fitted, the Charger Controller is ready to be connected as shown in Fig.2. Note that the 8mm bolts, washers and nuts should be zinc-plated steel or preferably, stainless steel. Don't use passivated bolts – they're usually not good conductors.

Modifying your generator for a controlled kill!

As explained in the text, one of the best features of this Charger Controller is that it will automatically turn your generator off when charging is complete.

But to do this, a small "mod" is necessary – you need to parallel the generator's "kill" switch with a two-wire cable back to the charge controller "kill" relay (RLY2).

Exactly how you do this depends to a large extent on your generator. Basically, you need to find space on the control panel to mount a two-pin socket – its mating plug carries the "kill" command from the charger/controller.

Five seconds after the charge is completed, it shorts out the kill switch for five seconds (to ensure the generator really does turn off!).

We modified a Powertech 1kW AC/DC generator which we obtained from Jaycar Electronics some time ago. Unfortunately, this model is not stocked any more – but the basic arrangement is the same for most small generators.

All you need do is find somewhere on the panel to mount the socket so that it doesn't foul anything inside when the panel is replaced on the generator.

We used two-pin microphone sockets on both the charger controller and the generator. They're about the smallest we could find but the big advantage is they have captive (screw-in) plugs and so ensure a reliable connection.

It's then simply a matter of soldering on a short length of two-wire cable from the socket to the terminals on the kill switch (which may be labelled as "ENG SW" or similar), making sure that the kill switch operation is not disturbed.

Make up a cable as long as is required with mating plugs and you're ready to rock and roll . . . in silence!

Building it in

Most RVs, caravans, etc, these days have a separate "battery box", more often than not accessible from outside. Unless yours is really crammed full of batteries, it seems like a good idea to mount the charger/controller inside the same box.

Whatever you do, make sure the mounting is solid – you don't want the unit shaking loose halfway up the Oodnadatta track! An extra strap around the box would be a worthy "belts and braces" approach.

Naturally, you'd run the generator outside the van (watch those carbon monoxide fumes!) but connecting cables could stay readily accessible in the battery box. **SC**

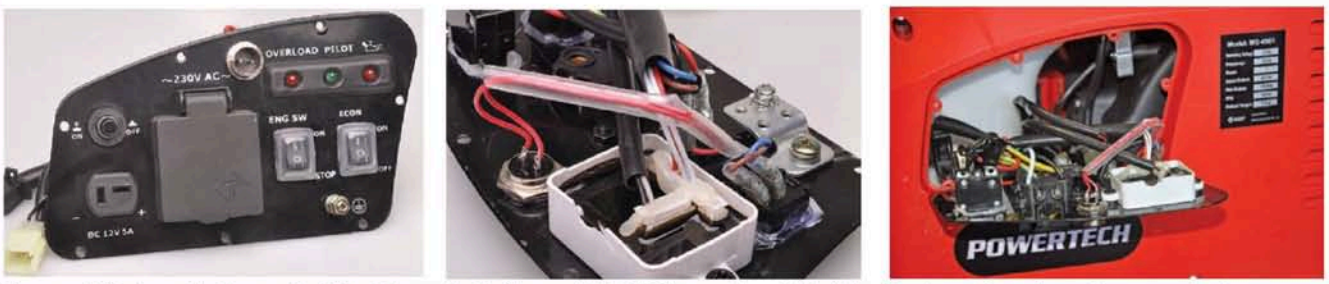

The modified control panel of the Powertech (Jaycar) 1kW Generator. At left is the two-pin microphone socket we added (about the only spot possible!). Centre is a close-up of the wiring and right is the panel about to go back in.

SERVICEMAN'S LOG

Odd happenings in my new house

Dave Thompson*

You never know what problems are going to crop up when you move into an old house and start renovating. In my case, we encountered some decidedly dilapidated electrical wiring but after tidying it up, we were hit with a puzzling power outage.

Items Covered This Month

- Gremlins in Dave's new house
- Bosch BSG82030AU/01 vacuum cleaner
- Sharp microwave oven repair
- Fuses can be deceptive
- Merlin Powerlift garage door opener

I reckon that the house we've just moved into is cursed in some way. Weird things have been happening from the day we started renovations but there's no evidence of an old crone ever living here and I'm reasonably sure that the house isn't built over an old burial ground. So perhaps all the odd things that have happened can be put down to plain old bad luck or to my seemingly ever-present companion, Murphy.

The first "peculiar" event concerned our mains power. During the course of our renovations, we had the walls and ceilings stripped naked and so had a golden opportunity to check out the wiring, much of which was showing its age. The main part of the house went up 1966 and it was mainly this area that we were renovating. This meant that we were dealing with the original 60s-era building materials and wiring.

In one case, I had removed a light fitting from the ceiling and after undoing all the screws and pulling it down, much of the exposed insulation on the wires fell away in small, brittle fragments. This left about 40mm of exposed copper wiring looking very dangerous and in obvious need of replacement. My reaction at the time was that if the rest of the wiring was anything like that, we were going to have some real problems.

This section of the house was built just like most other houses in this country at the time. It was all quite basic, with no fancy extras such as under-floor, wall or ceiling insulation. And with typically only one notoriously inefficient open fireplace located in the family room to heat the whole house, residents were obviously expected to weather the savage Christchurch winters with nothing more than grim fortitude and a pioneering spirit! During our renovations, we took the opportunity to rectify that situation by adding decent insulation and the difference it made was remarkable.

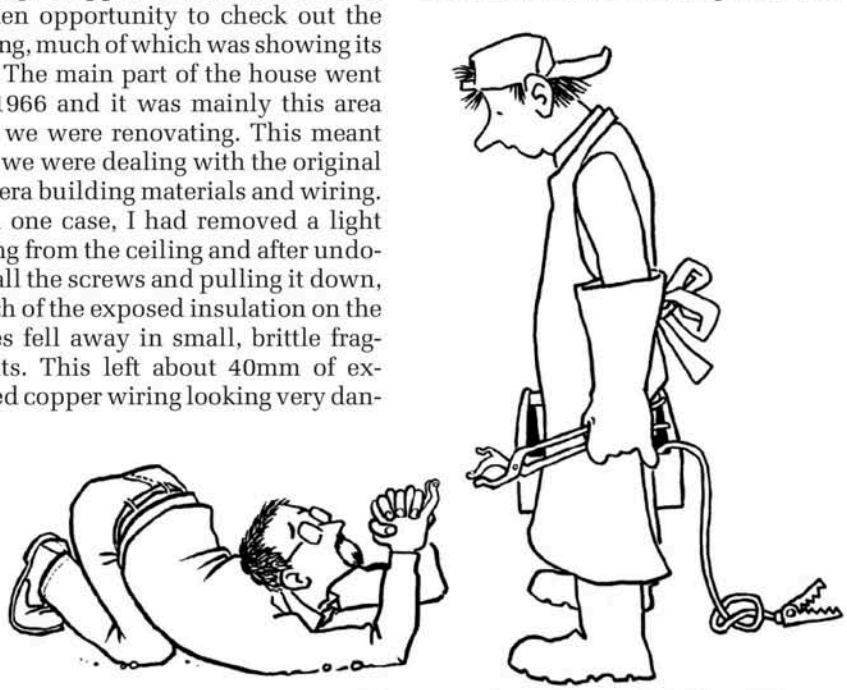

Because the majority of the downstairs wiring was still original, it was replaced wherever it was possible to access it. To be honest, the wiring was a mess due to circuits being added over the years. Some circuits disappeared off with no apparent destination, or at least none that we could trace.

There was also an outside light mounted on a faux Victorian lighting standard that was never used because the previous owners didn't know where the switch was or even if it existed. We borrowed some nifty electronic tracking tools from a sparky friend that allowed us to map out the fuses and switchboard to the various power and lighting circuits around the house. In the process, we located several power feeds that didn't go anywhere at all, disappearing at various locations into the joinery and back out but not terminating in any outlets or switches. These were stripped out to avoid confusion.

To accomplish this as safely as possible, we removed the pole fuse, which was a large ceramic-bodied, bayonet-fitting fuse arrangement mounted (confusingly) on the edge of the roof. It connected the house wiring to the mains feed coming in from the street. According to my electrician friend, it was rated at 65A and was easily removed by turning it 90° anti-clockwise until it dropped free.

With the pole fuse removed, the

house is theoretically isolated from the grid. Even so, I ran all my mains-detection devices over the switchboard before going anywhere near it, wary that some cowboy may have wired things up badly at some stage in the past and that this could catch out amateurs like myself. For those concerned readers, I can assure you that our friendly sparky – who but for very recent surgery would have been doing more of the physical work himself – oversaw every stage of the process. In fact, I ran everything by him (before and after) to make sure it was up to code and to ensure I wouldn't be killed in the process!

In the end, we examined all the wiring we could access and removed any that looked even slightly dodgy. In the process, we found one circuit in the 80s extension where four power sockets had been cabled in using wire intended for lighting circuits. We removed all of it right back to the switchboard and replaced it with new wiring with the correct specification.

Most of the wire used by the original electricians was a flat, twin-core type with a plain copper earth wire buried down the middle of the insulation. Anything utilising this type of cable was replaced with modern triple-core flex with a separate (and properly-insulated) multi-strand earth wire. In addition, every socket and light switch was replaced with new, modern plates and switches and any sockets used in wet areas included inbuilt RCDs.

Over the years, the switchboard had become a bit of a rat's nest, with what seemed like a separate circuit and fuse for every individual socket and light switch. We ended up replacing two of the buss bars due to the old ones being full to the brim with wiring and because both also had several stripped connectors, meaning those particular

holes could no longer be used.

Because there was literally no room left in the switchboard, we had to cull some of the circuits and combine others where possible so that we could add some heavy-gauge cabling and breakers for new heat pumps and a new oven. As a final upgrade, we replaced the old ceramic and wire fuses with circuit breakers. This was a reasonably expensive job given the price of the circuit breakers but one well worth doing.

In the end, we did a lot of electrical work and I thoroughly enjoyed doing it under my friend's supervision, acquiring a few new skills and some good knowledge along the way. (Editor's note: unlike Australians, New Zealanders are legally entitled to do house wiring but it must conform to AS/NZS 3000 standards and must be inspected and signed off by a licensed electrician).

While the floors were up in various places, we decided to overhaul the plumbing system by replacing all the rusting old galvanised water pipes we had access to with butylene equivalents. However, this impacted on our electrical system because many older homes utilise the metal plumbing structures for mains earth purposes. This means that removing old metal pipework can leave the house in a potentially dangerous state.

To rectify this, my sparky overseer stated that as we didn't appear to have a dedicated earth point for the house, we had to add one. To this end, we sourced the required 2-metre-long earth rod from a local supplier and drove it the regulation 1.8 metres into the ground right beside the house. After attaching a new earth cable to it (and the mandatory plastic tags warning about removing it), the wire was run through the house's framework and terminated at

HAMMOND MANUFACTURING
tel: 08 8240 2244
Standard and modified diecast aluminium, metal and plastic enclosures
www.hammondmfg.com

The Vacuum Cleaner With No Suck

A vacuum cleaner that doesn't suck sucks. S. G. of Brookvale, NSW got this one sucking again . . .

Lesley's vacuum cleaner, an 8-year old Bosch BSG82030AU/01 unit with variable suction control, was sucking up the dust quite nicely one day when suddenly its "suck" disappeared. It was so sick that it could hardly vacuum up fluff from a tiled floor, while on carpet it was completely useless.

The first thing Lesley did was poke a flexible hose through the wand assembly and the floor nozzle to clear any possible obstructions. They proved to be clear, so Lesley replaced both the collection bag and the motor protection filter that sits behind this bag, in front of the motor intake. The so-called "HEPA" filter that sits in the exhaust outlet was also inspected but it appeared to be clean and was left in place (HEPA is an acronym for "high efficiency particulate arrestance", in case you're wondering).

The collection bag and motor protection filter replacements failed to cure the problem and so, after inspecting the hose/wand assembly for damage, Lesley threw her non-sucking vacuum cleaner into her car and took it to an appliance repair centre. When she collected it several days later, they told her that the problem had been fixed by installing a new HEPA filter and billed her accordingly.

Well guess what; the new HEPA filter made no difference although in fairness to the service centre, it was easy to be misled as the machine appeared to have reasonable suction at the hose connection socket.

At that point, I offered to take a look at it and Lesley demonstrated the fault to me before handing the machine over. During this process, we discovered that the motor speed could be varied only up to about half-way. Moving the suction control over the top half of the range had no further effect, the motor speed remaining constant.

My initial thoughts were that if the motor speed could be varied over the first half of its range, then there probably wasn't much, if anything, wrong with the motor control module. Perhaps it was nothing more than a faulty pot on the control module or a simple mechanical fault in the speed control mechanism?

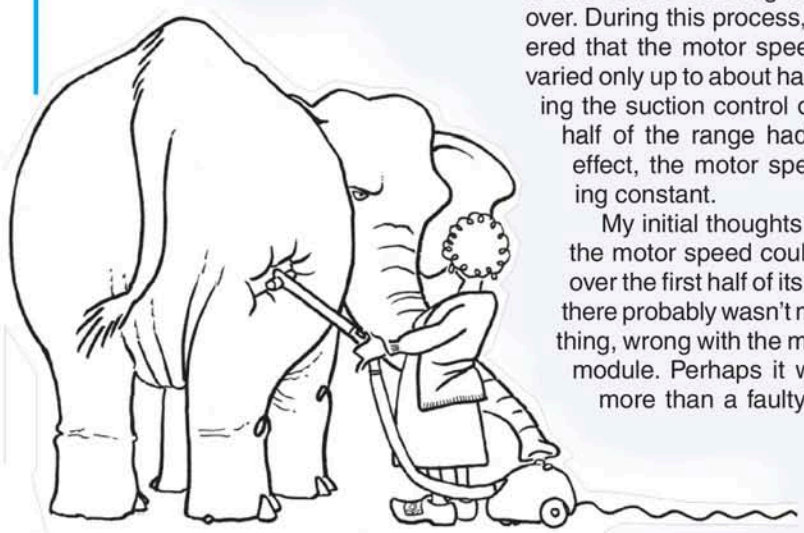

~IT SHOULD SUCK AN ELEPHANT THROUGH THE NOZZLE (OK, A SLIGHT EXAGGERATION)

Google to the rescue

Now I'm no vacuum cleaner repairman, so the first problem was to figure out how to remove the top cover from the rear half of the unit, so that I could get at the speed control assembly and motor control board. Lifting up the cover above the dust collection bag revealed two self-tapping screws that clearly had to be removed, while another two were hidden deep down in wells under the HEPA filter cover.

However, even with all four screws undone (and the collection bag and filters removed), the top cover stubbornly refused to budge. I searched for extra screws on top but there were none, so I looked at the base of the unit. There were no screws visible there either, so were they hidden under the steerable wheels and if so, how did the wheels come off?

That's where Google came to my rescue. A quick search on dismantling this unit revealed that you have to prise off the two rear wheels using a flat-blade screwdriver. This then reveals plastic clips on either side of the unit and releasing these allows the top cover of the machine to be lifted clear (after pulling the power cord part way out).

With the top cover out of the way, I took a look at the speed control drive mechanism. This is nothing more than a plastic spindle with a curved blade which runs between the two fingers of a Nylon slider bracket. As this bracket is slid one way or the other along its mounting rail, the spindle rotates and drives a potentiometer on the control board.

Basically, it's a very simple gear mechanism that converts a linear control action into a rotary control action to drive the pot.

As it turned out, the problem was

the switchboard's ground bus.

The thing is, without a professional electrician guiding me, I likely wouldn't have even considered the ramifications of changing the plumbing. And that's precisely why DIY/cowboy electricians and plumbers can be so darned dangerous. Electrical and plumbing work should both be left to those who know what they are doing!

As another example, during the quakes we dealt with so many prolonged power outages that a lot of residents purchased petrol-driven generators to keep their essentials running (myself included). However, I heard of several instances of people receiving severe electric shocks due to near neighbours connecting generators to their household supply and thus to the grid because an isolating switch wasn't used.

In the process, they inadvertently "livened up" neighbouring properties where the householder had assumed the power was off-line. A few discovered that their wiring was in fact live the wrong way and it's indeed fortunate that no-one was killed.

I'll now get to the main point of this

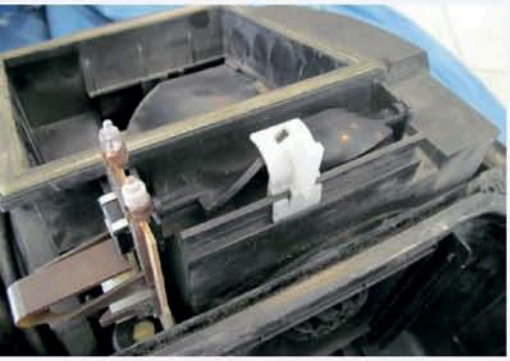

The speed control (left) rotates a curved spindle which in turn rotates a pot on the motor control PCB. The photo at right shows the partly-cleaned intake blades.

staring me right in the face – the Nylon slider bracket had somehow become detached from the curved blade on the spindle. All I had to do to re-engage it was slide the Nylon bracket off its rail at the low-speed end, then slide it back on again with the spindle's blade positioned between the bracket's fingers.

Once it was on, I applied power and gingerly varied the slide control, all the time taking great care to keep my hands well clear of the control board which operates at mains potential. And that was it – the motor speed could now be varied right across the control range and the motor could now be run at its top speed.

Job done, I thought, so I reassembled the machine, gave it a quick test and returned it to its owner.

Round 2

My triumph turned out to be short-lived. Lesley subsequently reported that although the machine was now working reasonably well, it still wasn't performing at its full potential. Apparently, at the maximum setting, it should suck an elephant through the nozzle (OK, a slight exaggeration) but it was still nowhere near capable of doing that.

And so I faced up to Lesley's baulky Bosch for round two. I began by carefully examining the hose and wand assembly, looking for blockages and air leaks. This revealed nothing, so I dismantled and cleaned the floor nozzle but again found nothing that would cause loss of suction.

The suction control was still correctly varying the motor speed over its full range, so that indicated that the control module itself was OK. It was beginning to look like there might be a blockage or a restriction near the motor somewhere.

I dismantled the machine once more, unclipped the top cover from the motor housing and lifted the motor clear. Once again, the problem was staring me in the face; the intake blades at the front of the motor were badly covered with a build-up of hair, dust and fluff (see photo). It was so bad, it was a wonder that the machine ran as well as it did.

Fairly obviously, this problem had been building up for some time but because the loss of performance had been gradual, it largely went unnoticed until the speed control mechanism went haywire.

I removed the fluff from the intake blades using a flat-blade screwdriver and a soft brush, then used my own vacuum cleaner to suck out any remaining debris. The reassembled machine then really did have lots of "suck" and has many years of life left in it yet.

story (it's been a long time coming, I admit). Anyway, half-way through the renovation process, we'd plugged the pole fuse back in so that we could test some of the lights and switches we'd installed. However, while we were checking things out, the power suddenly went off.

This was rather odd as we weren't really doing anything at the time. And while we still had some un-terminated live cables hanging out of the walls, everything was well-insulated with tape, so I was reasonably certain that we hadn't caused the outage.

We initially went outside and checked the pole fuse, half expecting it to be fried, but it was intact. A quick check with a neighbour then confirmed that there wasn't a general power outage, so there was definitely something wrong with our mains supply. All we had to do was find out what the problem was.

Over the previous few days, we'd been installing LED lights in the kitchen, laundry and bathroom and I'd noticed that they sometimes flickered when they were on. At the time, I thought that this was probably due to the fact that we still had a lot of connections to tidy up in the switchbox and my electrician friend agreed with this, as some connections can loosen with age,

As it turned out, a lot of the connections on the switchboard fuseholders required at least two screw turns to fully tighten them. Unfortunately, although this reduced the flickering somewhat, it still remained right up until the power completely failed.

Tracking it down

With full access to a range of electrician's tools and gadgets, I was confident we'd be able to quickly track down the cause. I began by climbing back up the ladder to the pole fuse. We'd been mucking around with this, so it was a natural place to start. My contact-less mains detector showed power flowing in from the street and up to where it entered the ceramic pole fuse housing. From that point on though, I was unable to detect anything, so it had to be the fuse, didn't it?

I removed the fuse and had a good look at it under a magnifying lamp. Its contacts, though aged and a bit corroded here and there, appeared fine and the fuse checked out OK on my multimeter. I then used my diamond contact shaping file and some fine-grit sandpaper to clean up both the holder and the fuse contacts but this made no difference; we still had no power.

Next, I took a closer look at the mains feed where it entered the fuseholder and discovered that the insulation had bubbled and discoloured – obvious signs of overheating. This could certainly have something to do with the problem but I wasn't going there. I'd made (and was obeying) a self-imposed rule of touching nothing on the incoming side of the pole fuse and in any case, I wasn't authorised to do so. Nor did I have the knowledge or the courage to muck around with a live mains feed.

My sparky mate confirmed that we'd have to get hold of the power company to go any further and they had a guy out

to my house within a couple of hours. I was straight up with him about what we'd been doing and accepted that if the fault was down to me, I would be up for the cost of the repairs (the standard operating practice for most utility companies).

As expected, the linesman had all the right tools; a proper wooden extension ladder, a heavy-duty safety apron and rubberised gauntlets (or long gloves). After listening to my theory about the dodgy-looking feed wire, he checked the meter box before climbing up to the pole fuse. He did what I'd done to test it, with the same result, and agreed that the signs of overheating were a concern.

And then, as soon he touched the wire, it dropped clear of the pole fuse. "There's your problem," he commented dryly! On closer inspection, it had corroded through, probably over many years, heating up as each strand gave way and less wire carried more current until it picked this moment to finally let go.

His initial plan was to simply reattach the cable to the pole fuse, tidy it up and carry on but one of the two brass screws that fastened the cable into the ceramic holder sheared off as he tried to release the burned-off end. This triggered a chain of events that entailed a new pole fuse being installed and even a whole new pole!

The reason for this is that new pole fuses need to be mounted at a certain height but our old pole was too short to comply. That meant that a new one had to be installed.

In the end, it was a different and a much more modern arrangement. Best of all it finally restored power to the house so we could carry on with our renovations.

Sharp microwave oven repair

Microwave ovens are now so cheap that most people immediately replace a faulty unit with a new one. Not so J. N. of Tauranga, NZ. When the display on his microwave oven failed, he fixed it instead of consigning it to landfill . . .

We've owned a Sharp Carousel microwave oven for some time now and it has suited our purposes admirably. Unfortunately, its display suddenly disappeared one day but all the other functions were still fine.

As a semi-retired electrical/electronics technician, I like to do any repairs on our home appliances myself and this Sharp microwave was no exception. I began my investigation by dismantling its front panel and found a single PCB mounted behind the display. I then downloaded the matching circuit diagram from Sharp's website.

It didn't take me long to realise that the combined display/processor IC had simply given up powering the display. I then contacted a Sharp parts supplier but they couldn't supply the PCB alone, instead quoting for a complete front panel and PCB for NZ$199 + GST. I declined; for that sort of money, I could buy a new microwave!

I was not about to give up that easily, however. I had the Sharp part number for just the PCB, so I surfed the net for a replacement. Amazingly, I came across the exact replacement on eBay, complete with the front panel, for an outlay of just NZ$49 landed in NZ.

When it arrived, I swapped over the power supply transformer from our old unit in keeping with our 230VAC mains input, since the US transformer it came with was for 120VAC. After reassembly, the microwave worked perfectly again and I was feeling very pleased with myself until I realised that the clock was running at the wrong speed. This also meant that the timer would be way out.

And then the penny dropped! After checking the circuit diagram, I realised that the oscillator running the processor was locked to the mains frequency and this new unit needed 60Hz instead 50Hz to operate correctly.

Determined not to be beaten, I isolated the now 50Hz pulse to the processor at its INTPO terminal. I then delved into my spare parts box where I was lucky enough to find an MM5369 oscillator IC and a 3.579MHz crystal. Armed with these parts, plus a few passive components, I then constructed a pulse unit on Veroboard which produced a nice 60Hz output.

The next step was to "steal" some power from the processor's DC supply to power this add-on board. The output from the MM5369 was then connected to the processor's INTPO terminal and the board secured in position.

The timebase conversion proved to be a success and our old Sharp microwave is still soldiering on, with a nice clear display.

Fuses can be deceptive

There's only one sure way to check a fuse and that's with a meter, as L. W. of Logan, Qld found out when he tackled a faulty AC/DC fridge. Here's what happened . . .

On our new caravan's maiden voyage, I noticed that the 3-way fridge didn't seem to hold up too well when operating on the 12V setting. It worked fine on either 230VAC or the gas setting but seemed to defrost rather quickly when 12V operation was selected.

For those unfamiliar with these devices, 12V operation is intended to only keep an already cold fridge cool; it definitely does not have the capacity to chill from scratch. As a result, this setting is usually only selected while in transit, when 230VAC is obviously not available (unless using an inverter) and running off gas is not recommended for safety reasons.

The 12V supply is usually provided by the towing vehicle's battery and should be set up so that it powers the fridge only while the vehicle's battery is being charged from the alternator. Nominal heater resistance is in the vicinity of 1Ω, so a battery voltage of 12.5V at the fridge results in a current of 12.5A and this would flatten the battery in a short time if it wasn't being recharged.

We made several trips during which the fridge quickly defrosted (ie, when powered from 12V) before I finally decided that something had to be done. After some thought, I decided to have

Servicing Stories Wanted

Do you have any good servicing stories that you would like to share in The Serviceman column? If so, why not send those stories in to us?

We pay for all contributions published but please note that your material must be original. Send your contribution by email to: editor@siliconchip.com.au

Please be sure to include your full name and address details.

Merlin Powerlift Garage Door Opener

Remote-controlled garage door openers are great except when they don't work. The electronic gremlins recently got into a controller belonging to A. D. of Naremburn, NSW while he was overseas but he managed to evict them and get it working again . . .

Many years ago, I built a garage from a kit and fitted a power-operated Merlin Powerlift roller door opener. It was quite easy to fit and it was subsequently used for many years without problems.

Several months ago, I went overseas and, following my usual practice, I disconnected the power to the door-opening mechanism before leaving. However, when I subsequently returned after a couple of months and plugged it in again, the remote control wouldn't open the door. I tried the manual button on the controller housing and it worked fine but it stubbornly refused to work with the remote transmitter.

I rang the company that I purchased the unit from and explained my problem. She quickly told me that it was probably the remote control itself and informed me that she could sell me a replacement. When I suggested that it may not be that and asked what I should do if it still didn't work, she had no reply other than to suggest buying another complete unit at a cost of $770.

Unfortunately, she wasn't able to provide any schematics and so I found a company which sold and repaired such doors. The guy I spoke to told me it was so old they didn't have spares but he'd check it out for $282, which included the price of another main electronic unit. Since I had paid only $375 for the whole thing originally, I didn't think that was worthwhile and thought that a simple solution would be to wire a remote switch (as sold by Oatley Electronics) across the manual button contacts, thereby completely bypassing the original remote control circuitry. In fact, I use just such an Oatley remote switch to control my home-made gate opener and I figured that I could use a spare button on the existing gate transmitter to trigger the garage door controller.

Before doing this though, I decided to have a look at the garage controller and its remote to see if I could find the fault. The LED on the remote still came on when the button was pressed, so I looked at the controller itself. On examining the main PCB, the first thing I noticed was a blackened resistor and a small 3-terminal device which appeared to have overheated. Fortunately, I could just read some of the writing on it and it appeared to be a 6V regulator.

One of the legs on this device was burnt where it entered the PCB and the track had been damaged. I didn't have a 6V regulator but I did have a 5V regulator in my parts drawer, so I wired in some resistors in the usual fashion to increase its output voltage, replaced the faulty resistor and repaired the damaged PCB track using some tinned copper wire and solder.

That was it; as soon as I reassembled it and applied power, I was rewarded with a perfectly working garage door opener again.

I have no idea what caused the original regulator to blow, since I had disconnected the mains supply from the controller before I went away. However, judging by the burnt tracks, it was obviously something fairly drastic and it almost certainly occurred when the unit was powered up on my return.

a look at it myself rather than take the caravan to the dealer. The installation manual conveniently provided a wiring diagram and it showed that the circuit was quite simple: a heating element in series with a 25A fuse, in turn connected through the mode switch to the 12V supply. So how hard could it be?

The first hurdle came when I removed the outside vent covers to access the rear of the fridge. Only the 12V connection point and one end of the heater wiring were visible; there was no fuse to be seen. This meant that I couldn't test the heater element or the fuse independently for continuity.

At that point, I connected my voltmeter across the 12V connections and, with the towing vehicle connected and its engine running, measured a healthy 14V with the fridge switched to the off position. Switching the fridge to 12V operation had no effect on this voltage reading, so I then decided to check the current. Just as I suspected, this gave a reading of 0A, indicating that there was an open circuit somewhere.

There was nothing for it; the fridge would have to be completely removed in order to gain better access to its rear. An hour later and with the back of the fridge now exposed, there was still no sign of a fuse. The problem was that both the 230VAC and the 12V DC wiring from the heaters disappeared under a thin metal cover which covered most of the top of the fridge.

Fortunately, this was easily removed by undoing four screws and at last there were two fuses visible. I was also able to see where the 12V heater element connected to its fuse and switch assembly. Being a 25A fuse, it was easy to "see" that it hadn't blown, so I decided to check the heater element for continuity. It measured just under 1Ω on the multimeter, which is normal.

I was getting a bit frustrated by now because that left only the switch as a suspect. And as it was a multi-pole switch that contained four sets of contacts, I really didn't fancy dismantling it to find out what the trouble was.

It was then that I recalled some advice that I was taught way back during my training days: "always test a fuse with your meter. It may look OK but you won't know for sure unless you see that needle move over to read zero ohms" (no digital meters in those days).

And so, with no better ideas at this stage, I removed the fuse and tested it on the low ohms scale of the multimeter. It measured open circuit! I tested it several more times because I just couldn't believe what the meter was saying. After all, it was a 25A fuse and it appeared to be intact.

Replacing this fuse restored the fridge to 12V operation for the first time in its life. All that was left then was to replace the metal cover and reinstall the fridge in its cabinet.

Several days later, I hit the ends of the faulty fuse with a hot soldering iron and as one end was heating up, its metal cap moved very slightly inwards. From then on, it read OK on the meter and so, just as I suspected, it had been faulty from new. SC

Need more line inputs?

BUILD OUR PHONO INPUT CONVERTER

Design: NICHOLAS VINEN
Article: BAO SMITH

This passive converter circuit lets you use the phono inputs on an amplifier or mixer, normally used for a turntable, as a pair of line-level inputs. This lets you plug in another CD player, DVD player or other line-level program source.

WHILE TURNTABLES may be making a slight resurgence over the last few years, they're still a rare sight in most people's homes. Because of this, you may often find the phono inputs on the back of an amplifier go unused.

So, what to do if you need another pair of inputs for a CD or DVD player? Our solution is to convert the phono inputs to line inputs via an external adaptor, the original idea being credited to Gary Johnston of Jaycar Electronics.

It's best not to plug a line-level device straight into a phono input for two reasons. One, because they provide approximately 34dB of amplification, which would cause it to overload; and two, because of the RIAA equalisation that is applied by a preamplifier built into the amplifier.

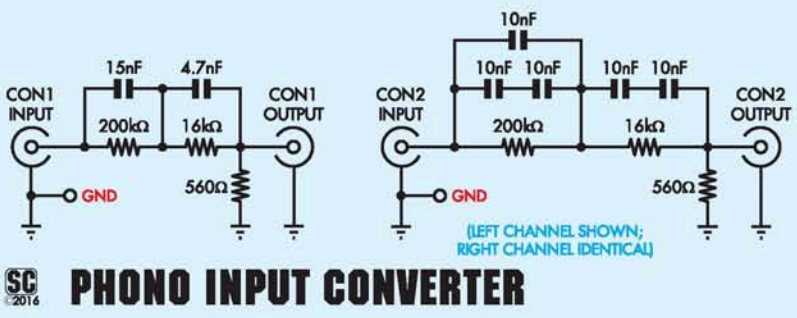

Fig.1: the circuits for both versions of the Phono Input Converter. The left circuit is made with through-hole components, while the right circuit is made with SMD components.

RIAA equalisation applies boost for lower frequencies (up to +20dB at 20Hz), approaching zero at 1kHz. Above 1kHz, the circuit applies treble cut that increases as the frequency rises to 20kHz (the cut being almost 20dB).

In effect, our converter applies the inverse of RIAA equalisation to the signal before passing it to the amplifier, which after applying the normal equalisation, leaves us with a virtually flat frequency response.

Since a typical phono preamplifier applies about 34dB of gain, our passive circuit needs approximately 34dB of attenuation and a filter that is the exact inverse of the RIAA equalisation.

In Fig.2 you can see the RIAA equalisation curve (yellow) and the ideal inverse curve (green). The dotted yellow line shows the RIAA equalisation curve with IEC amendment from 1976. The IEC amendment added a bass turnover at 50Hz, used to reduce very low frequency signals from the turntable. The general slope of the RIAA equali-

sation curve is 6dB/octave, and there are two inflections at approximately 500Hz and 2kHz.

Now look at Fig.1. There are two versions of the converter circuit; one using conventional through-hole components while the other uses surface-mount components (SMD). Note that both versions are virtually identical electrically. Both are passive circuits, meaning that no semiconductors or integrated circuits are used, and no power supply is needed.

Circuit details

When designing the circuit, we needed to consider the type of source input it would be used with.

Most program sources, whether CD or DVD players, AM/FM tuner, etc, use operational amplifiers in their output stages and they have very low output impedances. This means that this passive circuit can have quite a low impedance and not have any adverse effect on the performance of the source signal.

Next, as well as applying signal attenuation, the converter must have a characteristic which is the inverse of the RIAA equalisation curve.

As a result, there should be minimal difference between connecting a CD player into line inputs compared to feeding it into phono inputs via this converter.

Hence the circuit for each channel consists of a 200kΩ resistor shunted by a 15nF capacitor, in series with the combination of a 16kΩ resistor shunted by a 4.7nF capacitor. This describes the through-hole version of the circuit (left side of Fig.1).

The SMD version on the righthand-side of Fig.1 provides nearly the same shunt capacitance but uses series or series-parallel combinations of 10nF capacitors, allowing us to provide capacitance values closer to the ideal inverse RIAA characteristic.

In fact, you can see from Fig.2 the SMD version is much closer to the RIAA equalisation curve for lower frequencies, while the through-hole version is closer at higher frequencies. How accurately you can replicate the curve comes down to the quality of the components used.

We used C0G SMD capacitors in our converter as they have better tolerance and a more linear response, providing a closer replication of the inverse curve.

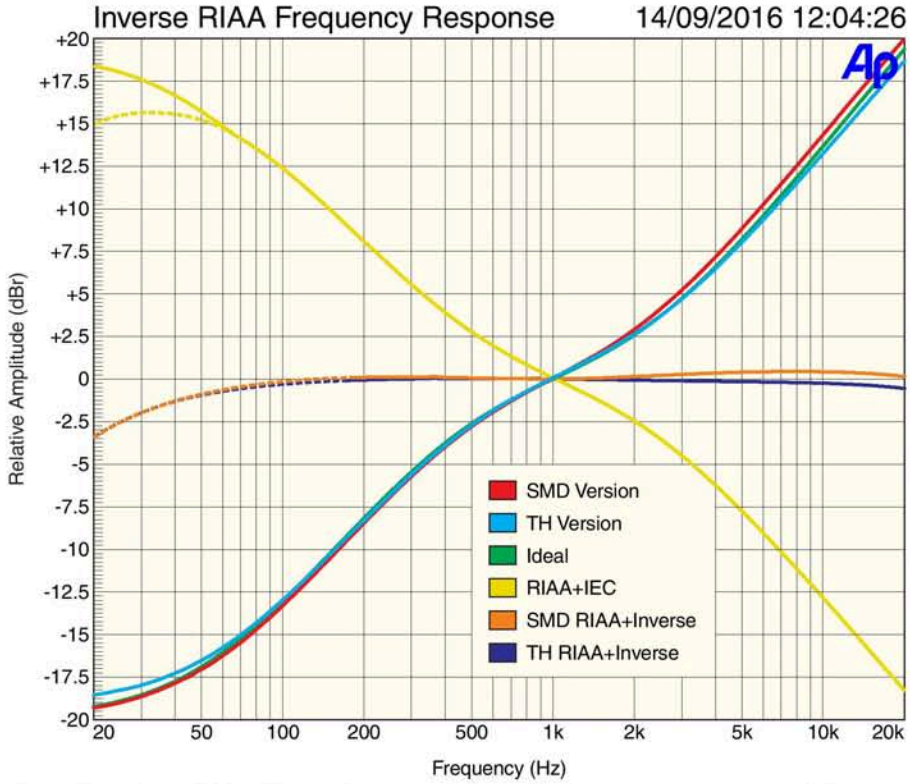

Fig.2: the red and blue line in the centre show the frequency response of the Phono Input Converter hooked up to our LP Doctor. For the most part it is fairly flat until it starts to deviate at 100Hz due to the IEC amended RIAA equalisation curve, shown in the dotted yellow line.

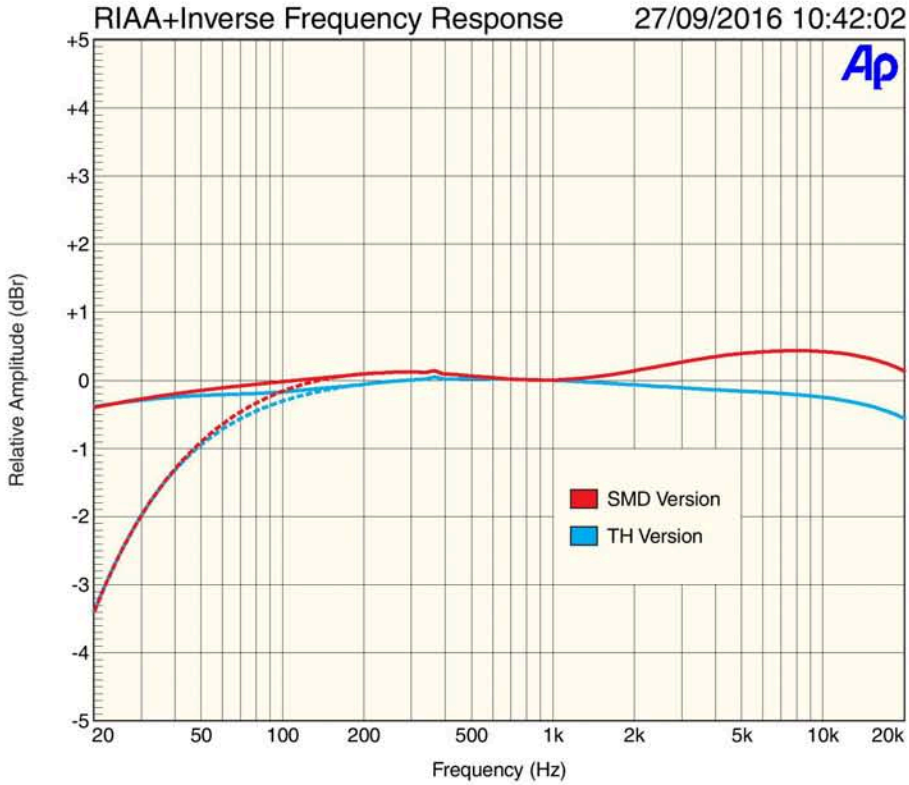

Fig.3: a close-up of both frequency response curves for the SMD and through-hole versions. Variations in the response can occur due to component tolerances and the quality of the amplifier used. Whether your amplifier uses an IEC amended equalisation curve will also affect the response below 50Hz.

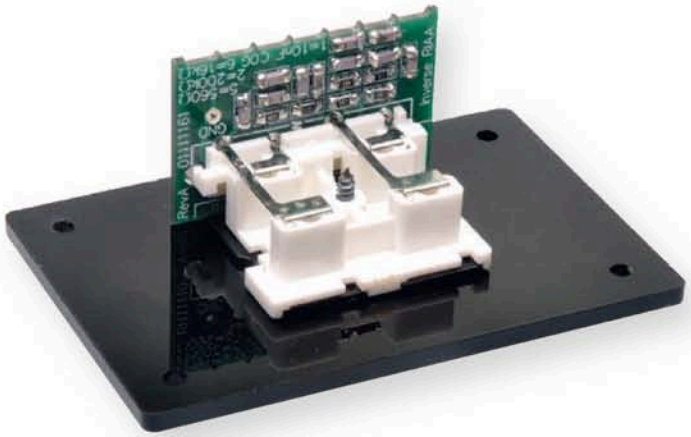

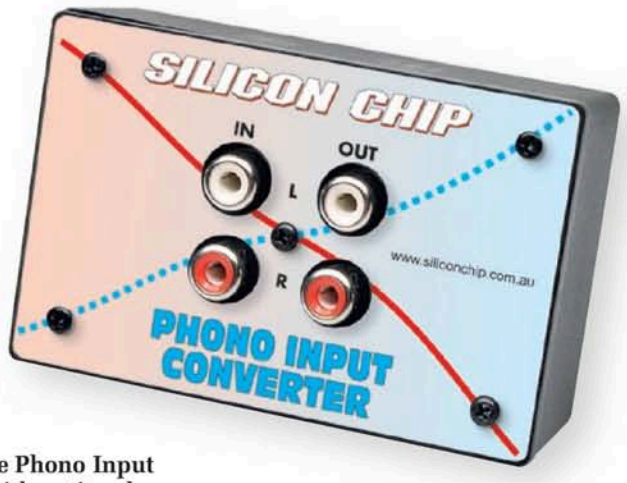

Above, you can see the rear view of the SMD version of the Phono Input Converter, while to the right is the front of the converter with optional label. At lower right is the rear of the through-hole version.

Parts List

1 PCB coded 01111161, 53 x 40.5mm
1 4-way RCA socket (Altronics P0211 or equivalent)
1 UB5 jiffy box (Jaycar HB6015, Altronics H0205 or equivalent)
1 laser-cut lid (optional)
1 panel label to fit lid (optional)

Through-hole version

Capacitors
2 4.7nF MKT polyester, 63/100V
2 15nF MKT polyester, 63/100V

Resistors (1/4W metal film, 1%)
2 560Ω* 2 16kΩ 2 200kΩ

SMD version

Capacitors (SMD 3216/1206)
10 10nF 50V C0G 5%

Resistors (SMD 3216/1206, 1/4W, 1%)
2 560Ω* 2 16kΩ 2 200kΩ

** change values to vary attenuation, see text*

Performance

We tested both circuits with the LP Doctor (SILICON CHIP, January 2001) which incorporates a high-performance RIAA preamplifier.

The superposition of both curves is shown in Fig.3, the dotted lines showing the response with the IEC amended equalisation curve. Both provide an overall frequency response within ±0.5dB from 20Hz to 20kHz.

However, due to the bass turnover, from the IEC amendment, you end up with a slight cut to bass below 50Hz, culminating in about 3.5dB of cut at 20Hz (if your preamplifier applies the IEC amendment).

Both circuits had a signal-to-noise ratio of 96dB unweighted with respect to 1kHz using a 2.2V_{RMS} input. Which is in the range of what you would expect from your average CD player.

Build the SMD or through-hole version — or both

For this project, we provide a PCB measuring 53 x 40.5mm and coded 01111161 which has both versions for a complete converter. You can build either one, or both if you need two converters. Either way, you will need to break the board in two and populate the one you want with surface-mount of through-hole components.

To house the finished converter, we used a small plastic case from Jaycar. Five holes will need to be drilled in the lid for the four RCA phono sockets and screw to hold the PCB/socket in place, or purchase a laser-cut lid. The laser-cutting diagram and panel label can be downloaded from **www.siliconchip.com.au**

When using the unit, keep it away from the power transformer in the amplifier and make sure the input and output leads do not run across mains power cords, otherwise hum pickup can become a problem.

Depending on the signal levels from your CD player, or other input source, you may need to increase or decrease the degree of attenuation provided.

You can provide greater attenuation by reducing the 560Ω resistor at the output, eg, using a 330Ω resistor. Alternatively, a 1kΩ resistor will provide less attenuation. **SC**

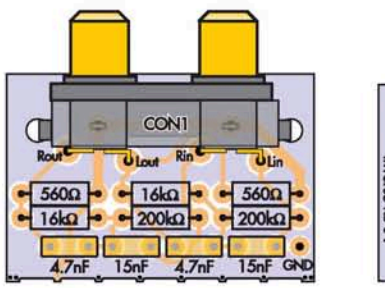

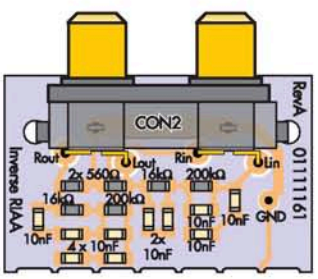

Fig.4: complete PCB overlays for the through-hole (left) and SMD (right) versions of the Phono Input Converter.

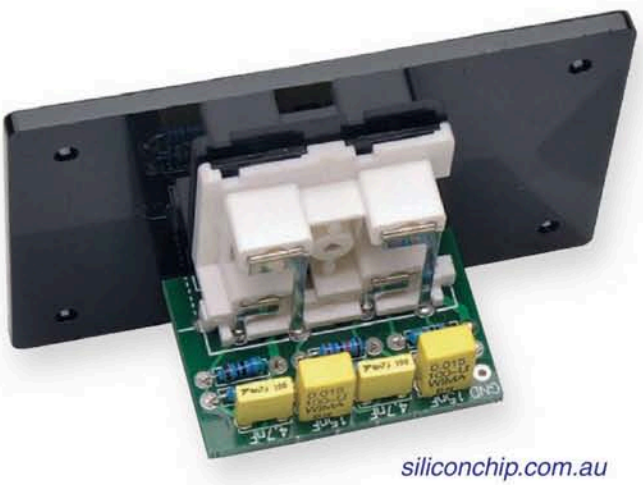

TEST, MEASURE & MAKE

Jaycar Electronics

$14.95

NEW

128X128 PIXEL LCD SCREEN MODULE
FOR ARDUINO® XC-4629

16 bit colour TFT. Only needs six pins for full control. SPI interface. Mounting holes.

Due early November.

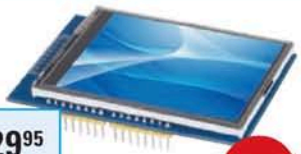

$29.95

NEW

240X320 PIXEL LCD TOUCH SCREEN FOR ARDUINO® XC-4630

Large, colourful display shield piggy-backs straight onto your Uno or Mega. Fast Parallel interface. microSD Card slot. Resistive touch interface.

Due early November.

$19.95

NEW

4G LTE TV ANTENNA SIGNAL FILTER LT-3067

Designed to fit in-line with an F-type coaxial cable. Filter unwanted mobile phone interference from your TV signal. Can be mounted on masthead. (FL694LP)

3D PRINTING BUNDLE

Purchase the printer and get the accessories free!

Includes 3D Printer + 1 x 250g roll filament (one of your choice) + Needle File Kit + Bed tape.

NERD PERKS CLUB OFFER

BUY ALL FOR $499

OVER $40 EXTRA VALUE

VALUED OVER $539

DUINOTECH MINI 3D PRINTER TL-4076

Simple and affordable, print within minutes of opening the box. Supports SD card and computer-based printing. 90 x 90 x 90mm print area.

Supplied with white 1.75mm filament, SD card & reader, tools and user manual.

PLA FILAMENTS FOR 3D PRINTERS $15.95 EA

250g roll of 1.75mm.

BLACK TL-4110
BLUE TL-4118
RED TL-4112
YELLOW TL-4120
CLEAR TL-4114
WHITE TL-4122
GREEN TL-4116

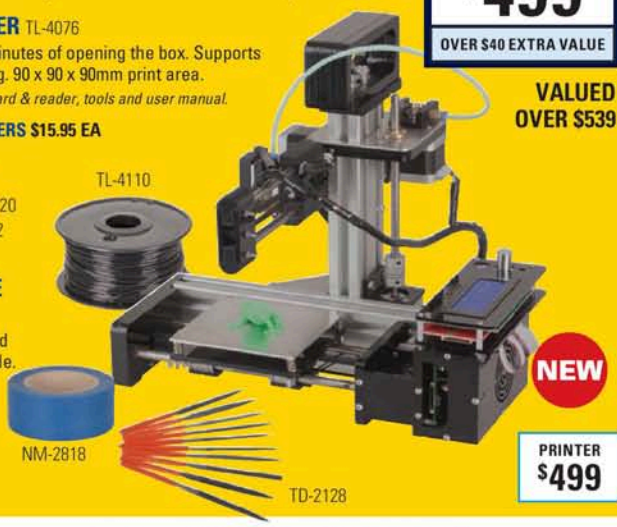

BLUE 3D PRINTER BED TAPE

50M ROLL NM-2818 **$9.95 NEW**

Helps the project stick to the print bed and makes removal easier. 48mm wide.

10 PIECE NEEDLE FILE KIT

TD-2128 **$14.95**

Integrated plastic handles. Handy storage wallet.

- 162mm long each

NEW

PRINTER $499

ECONOMY CATIII MULTIMETER WITH DATA HOLD QM-1517

NEW

Perfect for the electronics enthusiast or student. 600V, 2000 count. Square wave output. Backlit display. Continuity buzzer. 1 x 9V battery included.

- 115(L) x 65(W) x 30(D)mm

$14.95

DATA HOLD CATIII DIGITAL MULTIMETER WITH NON-CONTACT VOLTAGE SENSOR QM-1527

500V AC/DC, 2000 count. Diode test. 10A DC current. Backlight. Continuity beeper.

- 145(H) x 65(W) x 35(D)mm.

NEW $19.95

AUTORANGING TRUE RMS CATIII MULTIMETER QM-1321

1000V, 4000 count. Overload protection. Min/Max hold. Capacitance & frequency. 10 second screen backlight. Rugged design for heavy-duty use. Auto power off.

NOW BACK IN STOCK.

$39.95

POWER POINT AND EARTH LEAKAGE TESTER QP-2004

NEW

Multiple testing options. Buzzer and three LEDs. 30mA +/-5% rated current. 230VAC @ 50Hz rated voltage. IP65 rated enclosure. 69(L) x 67(W) x 32(H)mm.

Due early November.

$34.95

INLINE RCD CIRCUIT BREAKER QP-2002

Faster-acting and improved safety. Built-in RCD safety switch. Simple testing functionality. IP65 rated enclosure. 30mA trip current. 10A rated current. 1.8m long.

NEW

$34.95

SILICONE RESCUE TAPE

NA-2829 **WAS $29.95**

Permanent air-tight and water-tight seal in emergency situations. Designed for quick plumbing repairs, sealing hoses, coating ends etc. Will repair a broken radiator hose (in most cases). 25mm x 3600mm.

NOW $19.95

SAVE $10

PURCHASE ANY METER ON PAGE 5 AND RECEIVE A FREE SMART TEST SCREWDRIVER!

PCDUINO LINKER KIT

NERD PERKS CLUB OFFER
BUY ALL FOR $149
SAVE OVER $26

WHAT IS LINKER?

Linker is a new range of modules and accessories that makes it easy to enter the world of Arduino®. It's ideal for schools and big or small kids keen to learn and play with Arduino®. Simply attach linker shields to mainboards and connect with Linker leads. There are over 20 products in the Linker range plus it allows you to use anything Arduino® to further expand. No soldering required.

PCDUINO V3.0 WITH WI-FI XC-4350 $129

pcDuino V3.0 is a high performance, cost effective mini PC platform that runs on Ubuntu or Android ICS. With onboard HDMI, USB, SATA, LVDS and Wi-Fi you can use it in robotics, home theatre, electronic control and other various applications.

LINKER BASE SHIELD XC-4557 $24.95

Simple and tidy connection between all Linker sensors/modules and Arduino®/pcDuino.

LINKER 200MM JUMPER LEAD

XC-4558 $4.95

Connects Linker kit sensors/modules and base shield.

10MM BLUE LED

XC-4564 $5.95

Monitor controls from digital ports.

LINKER TOUCH SENSOR XC-4572 $10.95

A capacitive touch sensor to replace a push button.

ARDUINO® COMPATIBLE MODULES AND SHIELDS

$8.95

3-AXIS ACCELEROMETER MODULE XC-4478

Measure acceleration, detect impacts and determine orientation for your Arduino® robotics projects.

- 21(L) x 15(W) x 11(H)

$9.95

ALCOHOL SENSOR MODULE XC-4540

Detect alcohol, smoke and other volatile substances. Check for gas leaks, use it as a smoke detector, or even track how your home brew is going. Adjustable sensitivity.

- 50(L) x 20(W) x 13(H)mm

$9.95

30A CURRENT SENSOR MODULE XC-4610

Outputs a voltage proportional to current passing through the sense pins on the module. Uses ACS712 hall effect sensor.

- Output ratio is 66mV/A
- Compact board only 31mm x 13mm

$19.95

DATA LOGGING SHIELD XC-4536

Save your data to an SD Card (not included), and use the inbuilt battery backed clock module to timestamp your readings.

$4.95

SOIL MOISTURE SENSOR MODULE XC-4604

Use this module to detect when your plants need watering. Analog output.

- Works on 3.3V or 5V
- Current less than 20mA
- 20mm x 60mm

$5.95

PHOTOSENSITIVE LDR SENSOR MODULE XC-4446

Measures light levels. Connect it straight into your Arduino® board to build a night/day sensor, a sun tracker or combine it with our laser module XC-4490 to make a laser trip wire.

- Includes breakout cable
- 29(W) x 22(D) x 10(H)mm

$5.95

PIR MOTION DETECTOR MODULE XC-4444

A pyroelectric infrared PIR motion sensor is a handy addition to any Arduino® project. Wide operating range and delay times changeable. A must for any security application.

- 32(L) x 24(W) x 25(H)mm

$5.95

TEMPERATURE SENSOR MODULE XC-4494

Outputs an analog voltage that varies directly with temperature. Connect it straight to one of your Arduino® board analog inputs. Max 100°C.

- 21cm Breakout cable included
- 33(W) x 22(D) x 9(H)mm

$7.95

MICROPHONE SOUND SENSOR MODULE XC-4438

Highly sensitive with two outputs - an analogue output for real time microphone voltage signal and a digital output for when the sound intensity reaches its threshold.

- Sensitivity potentiometer adjustment
- 43(L) x 16(W) x 13(H)mm

$7.95

LINE TRACE SENSOR MODULE XC-4474

Measures the reflectivity of a surface with an infrared emitter/detector pair.

- VCC/OUT/GND pin connector
- 2.5-12V power supply
- 18-20mA at 5V working current

$9.95

TEMPERATURE AND HUMIDITY SENSOR MODULE XC-4520

Fully digital operated so no analog-to-digital calibration is required. 1Hz sample rate.

- 0 °C - 50 °C +/- 2 °C temperature range
- 20 – 80% +/- 5% humidity range
- 52(W) x 20(L) x 13(H)mm

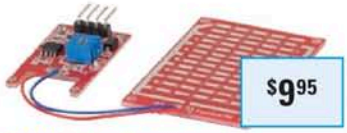

$9.95

RAIN SENSOR MODULE

XC-4603

This sensor will detect contact from any conductive object, not just rain, so it could be used for as a large touch sensor panel as well as letting you know when its raining.

DELUXE MODULES PACKAGE XC-4288

Get more savings by purchasing this 37 modules-in-1 pack. Includes commonly used sensors and modules for Duinotech and Arduino®: joystick, magnetic, temperature, IR, LED and more.
See website for details.

$129

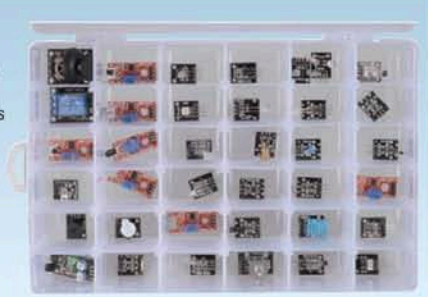

$37.95

ULTRAVIOLET SENSOR MODULE XC-4518

Can be used to measure UV exposure from the sun, or even check that your UV steriliser or EPROM eraser are working correctly.

- Response wavelength 200-370nm
- 43(L) x 13(W) x 8(H)mm

$159

INTELLIGENT 1.3" ROUND LCD MODULE XC-4284

Easy to program. Great for graphical gauges on your Arduino® project. Kit includes an Arduino® Adaptor Shield, a 5 pin header, jumper leads and also a 4GB microSD card.

- 43(L) x 47(W) x 14(D)mm

ARDUINO® PROJECT OF THE MONTH

REVIVE YOUR ARDUINO® - ISP* PROGRAMMING

A handy tool to have in your Arduino® Kit.

Aside from giving you a faster way of programming your Arduino® Boards, an ISP programmer can also be used to reprogram a faulty bootloader or even install a new bootloader (with new features). It also allows you to squeeze a few more bytes of program storage into your sketch.

Alternatively, if you're looking at branching out away from prototyping with Arduino® boards, and prefer a standalone IC like the ATMega 328P, you can use ISP instead of designing a USB-serial converter into your circuit.

**ISP = In System Programming*

DIY

MORE INFO ONLINE

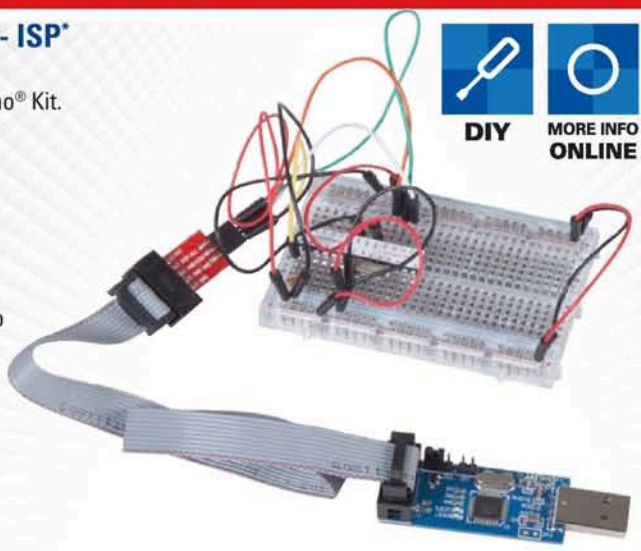

SEE STEP-BY-STEP INSTRUCTIONS AT www.jaycar.com.au/isp-programming

NERD PERKS CLUB OFFER
BUY ALL FOR $33.95
SAVE OVER 28%

WHAT YOU WILL NEED:

ISP PROGRAMMER	XC-4627 **$14.95**
ATMEGA 328P IC WITH 16MHZ CRYSTAL	ZZ-8727 **$12.95**
MID-SIZED BREADBOARD	PB-8820 **$7.95**
PLUG-PLUG JUMPER LEADS	WC-6024 **$5.95**
ISP 10-PIN TO 6-PIN ADAPTOR	XC-4613 **$4.95**
10KOHM RESISTOR PACK	RR-0596 **55c**

VALUED AT $47.30

ARDUINO® ESSENTIALS

FROM $5.45 NERD PERKS 2x POINTS

XC-4440

RELAY BOARDS

Provides the easiest way to use your Arduino® project to switch real world devices.

- Status LEDs show channel status
- Screw terminals for easy connection to relay contact

1 CHANNEL 5VDC 40(W) x 27(D) x 18(H)mm. XC-4419 **$5.45**
4 CHANNEL 12VDC 77(W) x 55(D) x 17(H)mm. XC-4440 **$12.95**
8 CHANNEL 12VDC 135(W) x 50(D) x 19(H)mm. XC-4418 **$19.95**

$5.95 ea NERD PERKS 2x POINTS

150MM JUMPER LEADS

40 PIECE

Various colours for prototyping. Ideal for Arduino® and DIY projects. Each flexible lead has pins to suit breadboards or PCB headers.

PLUG TO PLUG WC-6024 **$5.95**
SOCKET TO SOCKET WC-6026 **$5.95**
PLUG TO SOCKET WC-6028 **$5.95**

$4.50 NERD PERKS 2x POINTS

NERD PERKS CLUB OFFER
BUY BOTH FOR $8.50
SAVE $4.95

PC BOARDS VERO TYPE STRIP HP-9540

Alpha numeric grid, pre- drilled 0.9mm, 2.5mm spacing. 95 x 76mm.

SPOT FACE CUTTER FOR STRIP BOARDS TD-2461

Designed to neatly remove copper track on strip type prototyping boards. Total length 110mm.

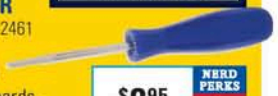

$8.95 NERD PERKS 2x POINTS

FROM $12.95 NERD PERKS 2x POINTS

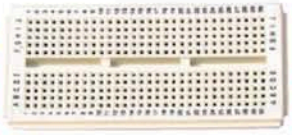

MINI BREADBOARD

300 HOLES PB-8832 **$12.95**

One terminal strip supplied which gives 30 holes x 10. Total 300 holes. 39(W) x 87(L)mm.

ALSO AVAILABLE:

BREADBOARD WITH 830 TIE POINTS PB-8815 **$14.95**

$29.95

LED PACK

100-PIECES ZD-1694

This assorted pack contains 3mm and 5mm LEDs of mixed colours. Even includes 10 x 5mm mounting hardware FREE! See website for full contents.

- Red, green, yellow, orange LEDs

LIGHT DUTY HOOK-UP WIRE

8 COLOURS PACK WH-3009

Quality tinned hook-up wire on plastic spools. 8 rolls, each roll a different colour.

- 25m on each roll

$34.95

$12.95

NEW

ATMEGA328P MCU IC

WITH ARDUINO® UNO BOOTLOADER ZZ-8727

A microcontroller for you to build your very own customised Arduino compatible projects. Pre-installed with the Arduino Uno Bootloader and features a label on detailing the pinouts. Includes 16MHz crystal oscillator.

- Same IO pins as Duinotech Uno Board

ARDUINO® STACKABLE HEADER HM-3208

NEW

Build a stackable shield, or make your current shield stackable. Alternatively, shorten the pins to make female headers just like the Duinotech main boards.

$4.50 NERD PERKS 2x POINTS

NEW

40 PIN FEMALE HEADER STRIP HM-3230

Like the headers on Duinotech main boards. Make a compact multi-way plug and socket arrangement.

$1.80 NERD PERKS 2x POINTS

TOOLS FOR TEST & MEASURE PROJECTS

There has been an obvious resurgence in people getting back to the workbench and reviving skills involving manual dexterity. As you will see across the following pages, Jaycar has all the DIY tools you'll need to equip your workbench so you can create projects from the power of your brain and your hands.

1. VACUUM BENCH VICE WITH 75MM JAW TH-1766 WAS $39.95
- 75mm opening jaw with removable soft rubber jaw covers
- Multi-positional ball swivel allows the jaws' working position to be varied through a full 360deg axis
- Approximately 160mm tall

2. DESK MOUNT MAGNIFYING LED LAMP QM-3546
- Ideal for hobbies and projects
- Mains powered
- 3 dioptre magnification

3. 0-30VDC REGULATED POWER SUPPLY MP-3840
- 0 to 5A
- 1mV ripple voltage
- Avoid overheating, burnout, and over-current
- Easy-to-use LCD display panel

4. CAPACITANCE METER QM-1020 WAS $29.95

Analogue multimeters are still the best way to test a capacitor.
- AC/DC voltages up to 1000V
- DC current up to 250mA
- Resistance measurement

5. BENCHTOP WORK MAT HM-8100 WAS $12.95
- Durable A3 size PVC cutting mat is just the thing to protect your work benchtop.
- Ruled with a centimetre spaced grid for easy referencing
- 3mm thick - 450 x 300mm

6. FOAM INSERT SMALL ALUMINIUM ATTACHE CASE HB-6355
- Removable 15mm square foam pieces to fit your equipment
- Lockable and supplied with two keys
- Includes carry strap
- 407(W) x 277(D) x 95(H)mm

PANEL METERS

$17.95 ea QP-5013

PANEL METERS - MOVING COIL TYPE

8 models to select from. Visit website for info.
- 44mm meter hole
- Class 2.5
- 58(W) x 52(H)mm

SELF-POWERED LED QP-5586

Simple 2 wire connection for voltage readout. Auto zero calibration and easy to read red LED display. Easy installation. Automatic polarity sensing. Cutout size 42 x 23mm.

ALSO AVAILABLE:
LED AMMETER PANEL METER QP-5588 **$39.95**

$24.95

PANEL/SURFACE MOUNT LED VOLTMETER 5-30VDC QP-5582

The easiest way to monitor your battery voltage, or the voltage in any DC powered system. Simply wire up to a positive and negative DC power source. Supplied with a panel mount and a surface mount "hood".
- 60(W) x 42(H)mm

ALSO AVAILABLE: VOLTMETER AND AMPMETER 60.5(W) x 24(H)mm. QP-5584 **$39.95**

$22.95

FROM $619 SAVE $70

DIGITAL STORAGE OSCILLOSCOPES

Features trace capture, PC interface, storage of data on portable media etc.
- Sampling rate is 500MSa/s (QC-1932) / 1GSa/s (QC-1934)
- Memory depth is 32k (QC-1932) / 2M (QC-1934)

25MHZ DUAL CHANNEL 5.7" Screen. QC-1932
WAS $689 NOW $619 SAVE $70

100MHZ DUAL CHANNEL 5.7" Screen. QC-1934
WAS $1129 NOW $999 SAVE $130

DIGITAL CALIPERS TD-2081

Easy to use calibrated digital display with corresponding etched vernier scale. 150mm range.

BUDGET TD-2081 **$13.95**
PROFESSIONAL STAINLESS STEEL TD-2082 **$39.95**

FROM $13.95 NERD PERKS 2x POINTS

$19.95 NERD PERKS 2x POINTS

14 PIECE PRECISION HOBBY KNIFE SET TH-1916

Handy hobby tool set comprising of 10 different blades, handle, 70mm long tweezers, 90mm long flat screwdriver and vernier calipers, which measure up to 81mm (3.1inches).

STAINLESS STEEL TWEEZER SET TH-1760

Duckbill head, angled fine and straight superfine to manipulate surface mount components with ease. ESD coating on main body of tweezers greatly reduces static discharge issues.
- Angled & duckbill 120mm long
- Superfine 135mm long

$19.95 ea NERD PERKS 2x POINTS

WIN A DIGITAL MULTIMETER WITH WIRELESS USB

SIMPLY SUBMIT A PHOTO OF THE JAYCAR TOOL YOU CAN'T LIVE WITHOUT AND YOU COULD WIN.

WORTH $129

QM-1571

win.jaycar.com/workbench

Competition closes 23rd Nov. See website for the T&Cs

PURCHASE ANY METER ON THIS PAGE AND RECEIVE A FREE SMART TEST SCREWDRIVER TD-2055 VALUED AT $11.95

COUNT INDUCTANCE/ CAPACITANCE METER

QM-1548

Ideal for audio enthusiasts designing their own crossovers.

- 600V, 2000 count
- AC/DC voltages up to 1000V/750V
- AC/DC current up to 10A
- Hfe transistor & diode test

$64.95

AUTOMOTIVE METER

QM-1444

Features an inductive pickup for RPM measurement, dwell angle, and works with engines of 2 to 10 cylinders.

- 600V, 4000 count
- AC/DC voltages up to 600V
- AC/DC current up to 10A
- RPM x1, x10

$79.95

NETWORK CABLE METER XC-5078

Check cable integrity or measure AC & DC voltage, etc without needing to carry two separate devices.

- 600V, 2000 count
- AC/DC voltages up to 600V
- AC/DC current up to 200mA
- Resistance measurement

$84.95

ENVIRONMENT METER QM-1594

Combines the functions of a sound level meter, light meter, humidity meter and temperature meter to help get the job done faster.

- 600V, 4000 count
- AC/DC voltages up to 250V
- AC/DC current up to 10A
- Resistance, non-contact voltage measurement

$129

CAT III CLAMP METERS

Our range of CAT III Clamp Meters makes the best general troubleshooting tool for commercial and residential electricians and includes features found on more expensive units such as autoranging, data hold, non-contact voltage, relative measurement and auto power-off. Multi function with Resistance, Capacitance, Frequency and Temperature, all Clamp Meters are supplied with quality temperature probe and carry case.

QM-1561 **$69.95**

400A AC

QM-1561

- Cat III 600V, 4000 count
- AC/DC voltage < 600V
- AC current < 400A
- Jaw opening 30mm

QM-1563 **$129**

400A AC/DC

QM-1563

- Cat III 600V, 4000 count
- AC/DC voltage < 600V
- AC/DC current < 400A
- Jaw opening 30mm

QM-1566 **$159**

1000A TRUE RMS AC/ DC QM-1566

- Cat III 600V, 4000 count
- AC/DC voltage < 600V
- AC/DC current < 1000A
- True RMS, min-max, bargraph and more
- Jaw opening 40mm

CAT III NON-CONTACT AC VOLTAGE DETECTOR

QP-2268 **RRP $24.95**

NERD PERKS SPECIAL **$19.95** SAVE $5

A must have for every toolbox. Detects AC voltages from 50 to 1000V. The unit will glow green when safe, and flash red and beep when voltage is detected.

- LED flashlight function
- 2 x AAA batteries included
- 158(L) x 23(D)mm

$59.95

DIGITAL LIGHTMETER QM-1587

For workbench, photography, lab work, architectural, engineering and construction.

ALSO AVAILABLE:

PRO DIGITAL LIGHTMETER WITH COVER CASE QM-1584 **$169**

DIGITAL SOUND LEVEL METER QM-1589

Measure both A and C weightings and diagnose 'ambient' reading or short noise. Features data hold and min/max functions.

- 30 to 130dB

ALSO AVAILABLE:

PROFESSIONAL SOUND LEVEL METER WITH CALIBRATOR QM-1592 **$379**

$129

NON-CONTACT THERMOMETER

QM-7215

Safely measure temperature in hot, hazardous, or hard to reach places. 8:1 distance to spot ratio.

ALSO AVAILABLE:

NON-CONTACT THERMOMETER WITH DUAL LASER TARGETING QM-7221 **$139**

$59.95

THERMOCOUPLE THERMOMETER - 2 INPUT QM-1601

Works with K-type thermocouples and offers 0.1 or 1° user-selectable resolution over the entire measurement range.

- Wide temperature range
- Includes Holster and Thermocouples
- Backlit LCD
- Auto power off

$94.95

POCKET MOISTURE LEVEL METER

QP-2310

Suitable for measuring water content in building materials and wooden fibre articles.

- Backlit digital LCD screen
- 4 x LR44 batteries included
- Auto power off
- 96(H) x 40(W) x 20(D)mm

$34.95

HAND HELD PH METER QM-1670

Simple and accurate device for checking pH levels in water. Great for keeping your fish tank at the proper pH level.

ALSO AVAILABLE:

50ML BUFFER SOLUTION QM-1671 **$8.95**

$64.95

TEMPERATURE/HUMIDITY USB DATALOGGER QP-6014

Can store readings in internal memory for later download.

- Direct plug-in
- Windows 2000/XP/Vista
- -40 to 70°C (±1°C) temperature range
- 0 to 100% (±3°C) humidity range
- 32,000+ memory samples

ALSO AVAILABLE:

DIRECT PLUG-IN TYPE QP-6013 **$119**

$149

NOW **$149** SAVE $30

1KG DIGITAL BENCH SCALE QM-7264 WAS $179

0.01g resolution accuracy. Weighs in grams, ounces, pounds, grains, carats, troy ounces. Supplied with a wind shield and a built-in bubble level.

- Powered by included mains adapter or 4 x AA batteries (not included)
- 175(W) x 75(H) x 260(D)mm

ALL THE TOOLS YOU NEED FOR YOUR TRADE

$44.95

4P/6P/8P/10P MODULAR CRIMP TOOL TH-1936

This great tool will cut, strip, and crimp flat telephone cable, or Cat5e type cable. Made from high quality carbon steel. Interchangeable dies and ergonomic design. Brace to lock dies closed.

FREE RJ45 8P/8C FOR STRANDED CABLE PK.5 FOR NERD PERKS CARD HOLDERS*
**Valid with purchase of TH-1936*

PP-1434 VALUED AT $5.95

$69.95

CRIMP TOOL WITH NETWORK TESTER TH-1939

Quickly and easily test Ethernet twisted pair cables for wiring continuity, opens, shorts, and mis–wires. Includes PoE test.

FREE RJ45 CAT6 CONNECTOR PK.10 FOR NERD PERKS CARD HOLDERS*
**Valid with purchase of TH-1939*

PP-1447 VALUED AT $13.95

HEX RATCHET CRIMPING & RATCHET TOOL TH-1833 RRP $39.95

Heavy duty ratchet tool designed for crimping F, N, BNC, TNC, UHF, ST, SC & SMA connectors onto RG6 or RG58 coax cable. Features adjustable crimping force and ratchet mechanism for repeatability. Four hex crimping dies: 1.72mm, 5.49mm, 8.23mm and 9.14mm.

TV COAXIAL CABLE

WB-2014 **RRP $44.95**

Great for domestic TV & Pay TV installations! 75 ohm RG6 quad shield in a handy 30m roll.

NERD PERKS CLUB OFFER
BUY BOTH FOR $59
SAVE OVER 30%

$14.95 NERD PERKS 2x POINTS

CRIMPING TOOL FOR NON-INSULATED LUGS TH-1834

Comfortable handles and spring-loaded.

- From 14-18 AWG and 22-26 AWG
- Includes a built-in wire cutter
- 185mm long.

$39.95 NERD PERKS 2x POINTS

HEAVY DUTY RATCHET CRIMPING TOOL FOR INSULATED TERMINALS TH-1829

Has easy identification for crimping Red, Blue, and Yellow Terminals. Suitable for crimping insulated terminals from 0.5mm to 6.0mm in size.

$14.95 NERD PERKS 2x POINTS

POCKET WIRE STRIPPER TH-1817

Strips anything from 2G to RG6 coax. Easy to use and small enough to take anywhere on the job. 120mm long.

$15.95 NERD PERKS 2x POINTS

WIRE STRIPPER, CUTTER, PLIERS TH-1841

High quality precision stripper/cutter. Spring-loaded with locking jaws, rubber handles for added comfort. Cuts wire up to 3.0mm. Strips wire up to 2.6mm.

$12.95

PRECISION ANGLED SIDE CUTTERS TH-1897

Ideal for fine PCB work. Made from quality tool steel. Soft padded handles that are spring loaded for comfortable long term use. Easily cut leads. 127mm.

$32.95

ESD SAFE SIDECUTTERS TH-1922

Specifically for ESD work. High quality Japanese designed, Italian manufactured cutters for static-sensitive applications.

- 135mm long

$24.95

170MM LONG NOSE PLIERS TH-1986

Quality German design. Cut up to 4.0mm electrical wire. This could be the last pair of long nose general purpose pliers you need to buy! GS approved. 6.5" long.

$34.95

125MM PRECISION LONG NOSE PLIERS TH-1885

Made from quality tool steel. Features serrated jaws and box joint for precise action and strong grip. Coil spring for smooth, fatigue-free use. Insulated soft touch handles.

SMARTPHONE REPAIR KIT 27 PIECE TD-2118

Designed to repair iMac®, Mac® Air, iPhone®, Samsung®, HTC®, Nokia®, Sony® as well as many brands of mobile phone.

$29.95

FREE LEVEL INDICATOR KEYRING FOR NERD PERKS CARD HOLDERS* *Valid with purchase of TD-2118 or TD-2117*

TH-1931 VALUED AT $4.95

MULTI-PURPOSE PRECISION TOOL KIT 35 PIECE TD-2117

Ideal for electronic service tradespeople and hobbyists. Includes storage case.

$39.95

6 PIECE INSULATED ELECTRONIC SCREWDRIVER SET

TD-2026

Ergonomic handles with excellent non-slip grips. Fully insulated 1000V rated shafts. Storage case included. Slotted: 2mm, 2.5mm, 3mm. Phillips: #00, #0, #1. TÜV and GS approved.

ALSO AVAILABLE:
1,000V 7 PIECE SCREWDRIVER SET TD-2022 **$34.95**

$19.95

7 PIECE HEX NUT DRIVER SET

TD-2339

Allows a generous length of thread to protrude though the nut you are tightening. Sizes supplied are M3, M3.5, M4, M4.5, M5, M 5.5, and M6. A plastic storage pouch keeps the set together. A quality Japanese product.

ALSO AVAILABLE: THE POWER DRIVER BIT SET 32 Pieces TD-2035 **$14.95**

$26.95

NEW

HM-3234

FROM $1.20

WAGO SPLICE TERMINAL BLOCKS

Connect different conductors and bridge large differences in cross section with ease! 400V 32A.

2 WAY HM-3234 **$1.20**
3 WAY HM-3235 **$1.25**

FROM 75¢

HM-3231

WAGO PUSH WIRE CONNECTORS

Suits solid conductors with cross-sections up 4 mm². 400V.

24A 2 WAY/YELLOW HM-3231 **$0.75**
24A 4 WAY/ORANGE HM-3232 **$0.90**
41A 3 WAY/RED HM-3233 **$1.45**

NEW

NASHUA GAFFER TAPE

Genuine. No residue. 40m length x 48mm wide.

BLACK NM-2812
SILVER NM-2814

$34.95ea NERD PERKS 2x POINTS

STYLUS GAFFER TAPE

High quality waterproof with high visibility matte finish. 24mm wide x 10m.

GREEN NM-2813
PINK NM-2815

$14.95ea NERD PERKS 2x POINTS

FROM $1.25

PVC INSULATION TAPE

Top quality PVC tape. 19mm wide.

BLACK 5M	NM-2800 **$1.25**
BLUE 20M	NM-2801 **$2.95**
RED 20M	NM-2802 **$2.95**
BLACK 20M	NM-2803 **$2.75**
WHITE 20M	NM-2807 **$2.95**
YELLOW/GREEN 20M	NM-2804 **$2.95**

SOLDERING

There are high quality soldering options available that covers the whole spectrum. You really need a dedicated soldering station for your workbench and at least one hand-held portable for the toolbox. No matter what you choose, you will find a great product suitable for your needs.

240V 70W GOOT SOLDERING IRON PENCIL

TS-1430 **$79.95**

Exceptional heat recovery. With its high insulation and low current leakage, soldering of precision flat ICs and CMOS is safe.

- 320° Tip temperature
- Electricity Safety Approval Number SAITE20185
- Japanese Made

SPARE TIPS AVAILABLE:

0.5MM CONICAL TIP TS-1432 **$19.95**

0.3MM CONICAL TIP TS-1434 **$19.95**

3.00MM CHISEL TIP TS-1436 **$19.95**

NERD PERKS CLUB OFFER
TS-1430 + 3 TIPS $119*
SAVE OVER $20

*See T&Cs on page 8

$159

PORTASOL GAS SOLDERING IRON TOOL KIT TS-1328

This kit contains a Portasol Super Pro Gas Soldering Iron, storage case, cleaning sponge and tray, 2.4mm and 4.8mm double flat tip, hot air blow, knife tip and air deflector.

- 120 minutes run time
- 10 seconds fill, and 30 seconds heat up
- Maximum 580°C tip temperature (max 1300°C for built-in blow torch)

FREE BUTANE GAS 150G FOR NERD PERKS CARD HOLDERS*
Valid with purchase of TS-1328
NA-1020 VALUED AT $5.95

SOLDERING IRON TIP CLEANER

TS-1510

Uniform iron temperature ensures consistent joint quality and reduces cycle times.

- Suitable for lead-free solders
- Supplied with spare insert
- 60(dia) x 58(H)mm

$17.95

56G SOLDER FLUX PASTE NS-3070

Has a mildy-activated agent to provide superior fluxing and reduce solder waste.

- Ideal for situations when post-soldering cleaning is not possible, and when highly insulating residue is required
- Non-ionic and non-conductive
- Non-flammable and non-corrosive

$15.95

NERD PERKS SPECIAL $279
SAVE $20

GOOT 65W ESD SAFE TEMPERATURE CONTROLLED SOLDERING STATION

WITH DIGITAL DISPLAY TS-1440 **RRP $299**

Japanese manufactured with excellent temperature stability and anti-static characteristics. 230-240VAC supply voltage. 200 - 480°C temperature range.

- 0.5mmt tip supplied

ALSO AVAILABLE:

0.5MM TIP Supplied with iron. TS-1441 **$19.95**

0.2MM TIP TS-1442 **$19.95**

REPLACEMENT SPONGE TS-1445 **$7.95**

NERD PERKS CLUB OFFER
STATION + 4 TIPS $189*
SAVE OVER $20

60W LEAD-FREE SOLDERING STATION

WITH LCD PANEL TS-1390 **$159**

Suited to lead-free and ordinary leaded soldering. Pencil fitted with soft insulated rubber grip, silicon rubber sheathed power cable. Temperature range 160°C to 480°C. Microprocessor controlled. 130(L) x 170(W) x 240(H)mm.

SPARE TIPS AVAILABLE:

0.4MM CONICAL TIP TS-1391 **$12.95**

1.0MM CONICAL TIP TS-1392 **$12.95**

2.0MM CHISEL TIP TS-1393 **$12.95**

3.0MM BEVEL TIP TS-1394 **$12.95**

*See T&Cs on page 8

DURATECH SOLDER

60% Tin / 40%. Lead Resin cored.

200G ROLLS:

0.71MM NS-3005 **$15.95**

1.00MM NS-3010 **$15.95**

1KG ROLLS:

0.71MM NS-3002 **$74.95**

1.00MM NS-3015 **$74.95**

NS-3002

FROM $15.95

GOOT DESOLDER BRAID

High quality Goot brand Gootwick. Made in Japan. Contains wash-free RMA flux. Conforms to MIL-F-14256F.

1.5MM WIDE NS-3026

2MM WIDE NS-3027

3MM WIDE NS-3028

NS-3028

$5.95 ea

ANTI-STATIC TREATMENT

Static control - both in the workshop/factory and in the field - is becoming increasingly important for reliable manufacture, repair and/or installation of large surface mount LSI base boards. We offer a complete line of static control products for virtually any situation.

$9.95

CONDUCTIVE BRUSH

TH-1775

Use it to clean anything where static is a problem.

- 178mm long

$13.95

ANTI STATIC WRIST STRAP TH-1780

Adjustable hook and loop wrist strap, coiled lead and banana plug/alligator clip.

- Expanded lead length approx. 1.8 m

ALSO AVAILABLE: EXTRA LONG 3M COILED LEAD TH-1781 **$17.95**

$19.95

ANTI-STATIC WORK PLACE DESK MAT TH-1783

It has a hard wearing face over a dense sponge rubber base. 2 stud fasteners are included.

- 555(W) x 290(D)mm

$49.95

ANTI STATIC FIELD SERVICE MAT/BAG TH-1776

Ideal for field service people, who need an anti-static work area when on the move.

- Pouch size approx: 200 x 300mm

NERD PERKS CLUB MEMBERS RECEIVE:

10% OFF ALL SOLDER ROLLS*

*(*Applies to all 200G and 1Kg Rolls of Duratech Solder)*

EARN A POINT FOR EVERY DOLLAR SPENT AT ANY JAYCAR COMPANY STORE* & BE REWARDED WITH A $25 JAYCOINS GIFT CARD ONCE YOU REACH 500 POINTS!

Conditions apply. See website for T&Cs

REGISTER ONLINE TODAY BY VISITING: www.jaycar.com.au/nerdperks

SAVE UP TO 30%

CLEARANCE

Limited stock. Not available online. Contact store for stock availability.

NOW $19.95
SAVE $10

3 IN 1 STUD DETECTOR
WITH LCD SCREEN
QP-2283 **WAS $29.95**

NOW $24.95
SAVE $10

PLUG IN SENSOR
FOR SMARTPHONES
QM-1676 **WAS $34.95**

NOW $34.95
SAVE $10

12 COMPARTMENT PORTABLE STORAGE CABINET
HB-6301 **WAS $44.95**

NOW $69.95
SAVE $20

DIGITAL DC POWER METER
MS-6172 **WAS $89.95**

NOW $149
SAVE $30

PROFESSIONAL LASER DISTANCE METER
QM-1622 **WAS $179**
Limited Stock

NOW $169
SAVE $20

GENERAL PURPOSE TRUE RMS DMM
QM-1543 **WAS $189**
Limited Stock

NOW $249
SAVE $30

GENERAL PURPOSE TRUE RMS DMM
WITH SMARTPHONE APP QM-1576 **WAS $279**
Limited Stock

NOW $19.95
SAVE $10

HUMIDITY & TEMPERATURE SENSOR MODULE FOR ARDUINO®
XC-4246 **WAS $29.95**

NOW $29.95
SAVE $15

8 CHANNEL RELAY DRIVER SHIELD
XC-4276 **WAS $44.95**

NOW $29.95
SAVE $15

MIDI SHIELD
FOR ARDUINO®
XC-4545 **WAS $44.95**

NOW $129
SAVE $30

Wi-Fi/ETHERNET
FOR ARDUINO®
XC-4548 **WAS $159**

NOW $139
SAVE $30

STEPDUINO BOARD
XC-4249 **WAS $169**

Jaycar Electronics

HEAD OFFICE
320 Victoria Road, Rydalmere NSW 2116
Ph: (02) 8832 3100
Fax: (02) 8832 3169
ONLINE ORDERS
Website: www.jaycar.com.au
Email: techstore@jaycar.com.au
FREE CALL ORDERS: 1800 022 888

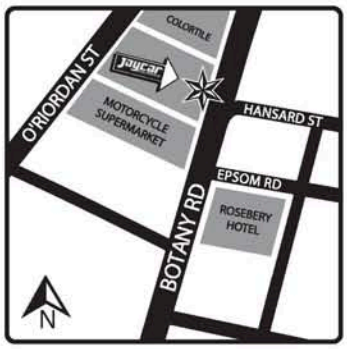

JAYCAR
ALEXANDRIA
366-370 BOTANY ROAD,
ALEXANDRIA NSW
PH: 02 9699 4699

AUSTRALIAN CAPITAL TERRITORY

Belconnen	Ph (02) 6253 5700
Fyshwick	Ph (02) 6239 1801
Tuggeranong	Ph (02) 6293 3270

NEW SOUTH WALES

Albury	Ph (02) 6021 6788
Alexandria	Ph (02) 9699 4699
Bankstown	Ph (02) 9709 2822
Blacktown	Ph (02) 9672 8400
Bondi Junction	Ph (02) 9369 3899
Brookvale	Ph (02) 9905 4130
Campbelltown	Ph (02) 4625 0775
Castle Hill	Ph (02) 9634 4470
Coffs Harbour	Ph (02) 6651 5238
Croydon	Ph (02) 9799 0402
Dubbo	Ph (02) 6881 8778
Erina	Ph (02) 4367 8190
Gore Hill	Ph (02) 9439 4799
Hornsby	Ph (02) 9476 6221
Hurstville	Ph (02) 9580 1844
Maitland	Ph (02) 4934 4911
Mona Vale	Ph (02) 9979 1711
Newcastle	Ph (02) 4968 4722
Penrith	Ph (02) 4721 8337
Port Macquarie	Ph (02) 6581 4476
Rydalmere	Ph (02) 8832 3120
Shellharbour	Ph (02) 4256 5106
Smithfield	Ph (02) 9604 7411
Sydney City	Ph (02) 9267 1614
Taren Point	Ph (02) 9531 7033
Tuggerah	Ph (02) 4353 5016
Tweed Heads	Ph (07) 5524 6566
Wagga Wagga	Ph (02) 6931 9333
Warners Bay	Ph (02) 4954 8100
Warwick Farm	Ph (02) 9821 3100
Wollongong	Ph (02) 4225 0969

QUEENSLAND

Aspley	Ph (07) 3863 0099
Browns Plains	Ph (07) 3800 0877
Burleigh Heads	Ph (07) 5576 5700
Caboolture	Ph (07) 5432 3152
Cairns	Ph (07) 4041 6747
Caloundra	Ph (07) 5491 1000
Capalaba	Ph (07) 3245 2014
Ipswich	Ph (07) 3282 5800
Labrador	Ph (07) 5537 4295
Mackay	Ph (07) 4953 0611
Maroochydore	Ph (07) 5479 3511
Mermaid Beach	Ph (07) 5526 6722
Nth Rockhampton	Ph (07) 4922 0880
Townsville	Ph (07) 4772 5022
Strathpine	Ph (07) 3889 6910
Underwood	Ph (07) 3841 4888
Woolloongabba	Ph (07) 3393 0777

VICTORIA

Brighton	Ph (03) 9530 5800
Cheltenham	Ph (03) 9585 5011
Coburg	Ph (03) 9384 1811
Ferntree Gully	Ph (03) 9758 5500
Frankston	Ph (03) 9781 4100
Geelong	Ph (03) 5221 5800
Hallam	Ph (03) 9796 4577
Kew East	Ph (03) 9859 6188
Melbourne City	Ph (03) 9663 2030
Melton	Ph (03) 8716 1433
Mornington	Ph (03) 5976 1311
Ringwood	Ph (03) 9870 9053
Roxburgh Park	Ph (03) 8339 2042
Shepparton	Ph (03) 5822 4037
Springvale	Ph (03) 9547 1022
Sunshine	Ph (03) 9310 8066
Thomastown	Ph (03) 9465 3333
Werribee	Ph (03) 9741 8951

SOUTH AUSTRALIA

Adelaide	Ph (08) 8221 5191
Clovelly Park	Ph (08) 8276 6901
Elizabeth	Ph (08) 8255 6999
Gepps Cross	Ph (08) 8262 3200
Modbury	Ph (08) 8265 7611
Reynella	Ph (08) 8387 3847

WESTERN AUSTRALIA

Belmont	Ph (08) 9477 3527
Bunbury	Ph (08) 9721 2868
Joondalup	Ph (08) 9301 0916
Maddington	Ph (08) 9493 4300
Mandurah	Ph (08) 9586 3827
Midland	Ph (08) 9250 8200
Northbridge	Ph (08) 9328 8252
O'Connor	Ph (08) 9337 2136
Osborne Park	Ph (08) 9444 9250
Rockingham	Ph (08) 9592 8000

TASMANIA

Hobart	Ph (03) 6272 9955
Kingston	Ph (03) 6240 1525
Launceston	Ph (03) 6334 3833

NORTHERN TERRITORY

Darwin	Ph (08) 8948 4043

TERMS AND CONDITIONS: REWARDS / NERD PERKS CARD HOLDERS FREE GIFT, % SAVING DEALS, DOUBLE POINTS & MEMBERS OFFERS requires ACTIVE Jaycar Rewards / Nerd Perks Card membership at time of purchase. Refer to website for Rewards/ Nerd Perks Card T&Cs. PAGE 3: Nerd Perks Card holders receive the Special price of $33.95 for Revive your Arduino® – ISP Programming Project, applies to XC-4627, ZZ-8727, PB-8820, WC-6024, XC-4613 & RR-0596 when purchased as bundle. Also, they receive a special price of $8.50 on HP-9540 & TD-2461 when purchased as bundle. Nerd Perks Card holders receive double points with the purchase of XC-4419, XC-4440, XC-4418, PB-8822, PB-8815, WC-6024, WC-6026, WC-6028, HP-9540, TD-2461, HM-3208 & HM-3230. PAGE 4: Nerd Perks Card holders receive double points with the purchase of TD-2081, TD-2082, TH-1760 & TH-1916. PAGE 5: Customers receive a free TD-2055 with the purchase of QM-1548, QM-1444, XC-5078, QM-1594, QM-1587, QM-1584, QM-1589, QM-1592, QM-7215, QM-7221, QM-1601, QP-8014, QP-8013, QP-2315, QM-1670, QM-1561, QM-1563 or QM-1568. PAGE 6: Nerd Perks Card holders receive double points with the purchase of TH-1834, TH-1929, TH-1817, TH-1841, NM-2812, NM-2814, NM-2813, NM-2815. Nerd Perks Card Holders also receive a free PP-1434 with the purchase of TH-1936, a free PP-1447 with the purchase of TH-1939, a free TH-1931 with the purchase of TD-2118 or TD-2117, and special price of $59 on TH-1833 & WB-2014 when purchased as bundle. PAGE 7: Nerd Perks Card holders receive 10% off on all 200G and 1Kg Rolls of Duratech Solder. Nerd Perks Card holders receive a free NA-1020 with the purchase of TS-1328. They also save over $20 when purchase TS-1430, TS-1432, TS-1434 & TS-1436 as a bundle, save over $20 when purchase TS-1390, TS-1391, TS-1392, TS-1393 & TS-1394 as a bundle, and receive a special of $279 with the purchase of TS-1440. DOUBLE POINTS ACCRUED DURING THE PROMOTION PERIOD will be allocated to the Nerd Perks card after the end of the month.

Arrival dates of new products in this flyer were confirmed at the time of print but delays sometimes occur. Please ring your local store to check stock details. Occasionally there are discontinued items advertised on a special / lower price in this promotional flyer that has limited to nil stock in certain stores, including Jaycar Authorised Stockist. These stores may not have stock of these items and can not order or transfer stock. Savings off Original RRP. Prices and special offers are valid from 24 October - 23 November, 2016.

PRODUCT SHOWCASE

Acrylic experimenter base for Arduino and Raspberry Pi

Arduinos and Raspberry Pis make an ideal platform to experiment; to expand the basic platform into something more exotic. The biggest problem that experimenters have faced is that they don't exactly lend themselves to expansion.

That's all changed now with these K-9610 clear acrylic bases from Altronics. Drilled to suit the Arduino UNO or Raspberry Pi modules, there's plenty of space next to the module for either a mockup or a breadboard such as the Altronics P 1020 or P 1002.

The base, made from 2mm acrylic, is 130x90mm and comes with four rubber feet and standoffs to suit.

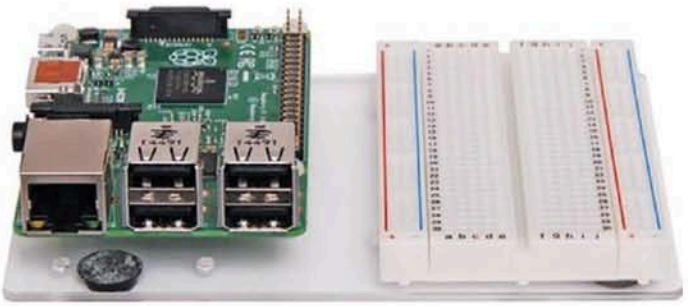

Altronics suggest the bases would not only suit individual experimenters but also in schools (where Raspberry Pi and Arduino are very popular), hobbyist workgroups, etc.

They're priced at $9.95 (inc GST) or for volume buyers (eg schools, etc) $8.95 for five or more.

Contact:
Altronics Distributors
(Head Office): 174 Roe St, Perth WA 6000
Tel: 1300 797 007
Web: www.altronics.com.au

Don't know anything about Arduino but want to? Get a Starter Kit!

It's not too long until Christmas – and we're sure there would be someone near and dear to you who would love to see one of these under their tree (maybe even yourself?).

We don't know whether these kits are available in Australia – yet – but even if not, they can be ordered direct from Arduino (see below) for about $AU120 plus freight. (It's likely Australian Arduino suppliers will also have this shortly, if not already).

With this excellent Starter Kit, you can not only learn how to use Arduino (it's said to be the ideal learning platform) but the 176-page manual that comes with it has instructions (and code) to build any one of 15 projects – everything from getting to know your tools through to a motorised pinwheel and even hacking buttons to create a master control of all your Arduino projects.

On the Arduino website, there is a step-by-step video to take you through all that the Starter Kit has to offer .

Incidentally, the name "Arduino" strictly only applies to the USA – outside the USA, you may be supplied with a kit bearing the name "Genuino": it is exactly the same thing but bearing a different moniker.

Contact:
Arduino
Web: www.arduino.cc
(See Arduino website for local resellers)

Jaycar drops 3D printer price

Not so long ago you'd need to mortgage your house to buy a 3D printer – now Jaycar have this Single Filament 3D printer on sale at just $699 (Cat TL-4100)!

And the best part is that unlike other Kit 3D printers, this one doesn't require an advanced degree to assemble. Its elegant open-frame delta design makes assembly straightforward and painless.

Print size is up to 250 x 140 x 140mm; overall size is 800 x 300 x 265mm. 250g printer filaments to suit are priced from $19.95 roll.

Contact:
Jaycar Electronics
(All stores)
Tel: 1800 022 888
Web: www.jaycar.com.au

Digi-Key "Most Favorite Electronics Component Distributor"

Regular Silicon Chip advertiser and global electronic components distributor, Digi-Key Electronics, was named Reader's Choice Most Favorite Electronics Component Distributor at the 2nd edition of the EM (Electronics Maker) Best of Industry Awards 2016 at the Bangalore International Exhibition Centre.

The 2016 Awards included key electronics categories including IoT, semiconductor, LED and lighting, solar and power, test and measurement, electronics component, automation, SMT, PCB, and EMS and honors the winners for their innovations, excellence and industry-leading performance.

The Electronics Maker Awards generate a lot of interest, recognising leaders in technology, efficiency, environmental benefits and quality for the Indian Electronics industry.

Contact:
Digi-Key
Tel: 1800 285 719
Web: www.digikey.com.au

Micromite Plus Advanced Programming

Pt.1: By Geoff Graham

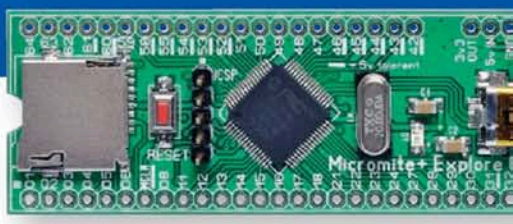

The Micromite Plus is not only faster than the Micromite but also boasts more RAM and storage space. It also has several new and important programming features such as SD card support and a graphical user interface (GUI) application library. This makes it easier than ever to develop an interactive touchscreen control panel; in fact, it will take you hours rather than months!

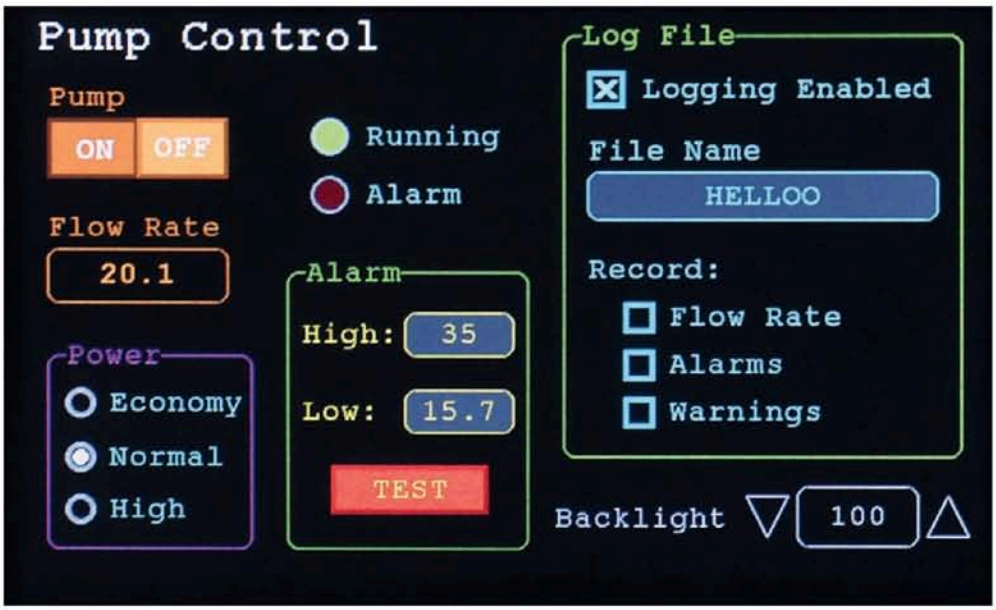

Fig.1: this screen shot shows an example of a control panel created by a BASIC program. Each object on the screen was created using a single BASIC command which specified the parameters of the control such as its type, location, dimensions and colour. MMBasic then manage the controls in the background. For example, when a button is pressed, MMBasic will change its appearance accordingly.

THE MICROMITE Plus has a number of new BASIC commands and features compared to the original Micromite, so even experienced Maximite/Micromite/BASIC programmers will have some new things to learn before they can take full advantage of its capabilities. So having introduced the Explore 64 module last month and the Explore 100 computer this month, it's time to get into the nitty gritty of using these amazing new features.

This month, we'll look at the new SD card file reading and writing support and also start delving into advanced GUI programming. In Pt.2 next month, we'll go over even more advanced techniques to make your GUIs slicker and easier to use, as well as to program.

SD card socket

Both the Explore 64 and Explore 100 boards are equipped with a microSD card socket which is fully accessible from within a BASIC program. The Explore 100 board can also read and write to full-size SD cards if a display module is attached which has an onboard SD card socket, or if a socket is wired to pin header CON10.

Regardless of which type of SD card you're using, you can have up to five files open at the same time and you can access or write the data sequentially or via random access. This makes the

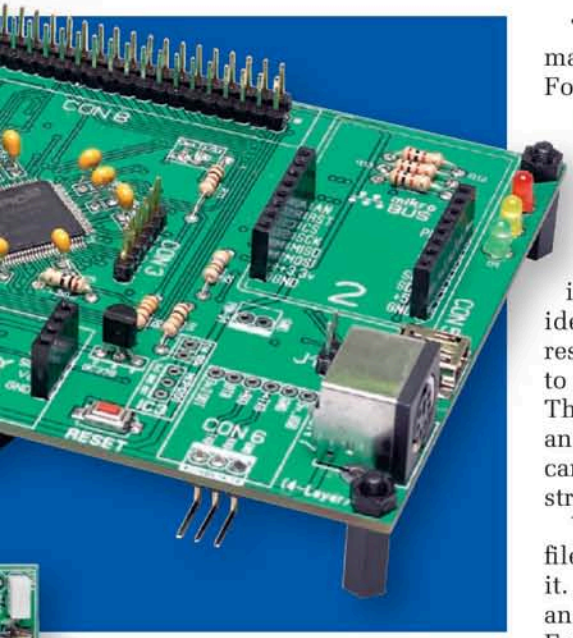

Micromite Plus perfect for logging data for later analysis.

The files written are compatible with Windows, Mac and Linux systems and to access the data it is as simple as popping the card out of its socket and into another computer. Or you can set up your program to read data off the card later and off-load it to a computer over a USB or serial interface.

The commands and functions related to the SD card are summarised in an accompanying panel. In addition, the "Micromite Plus User's Manual" has further details, so we will just go over the basics here.

Reading & writing to an SD card

To record data to the SD card, you first need to open the file for writing. For example:

```
OPEN "file.txt" FOR OUTPUT AS #2
```

This instructs MMBasic to create the file "file.txt" and prepare it for writing. If the file already exists, it will be overwritten (ie, erased) by this command. If you do not want to overwrite the file, open it "**FOR APPEND**" which will leave the file as it is and ensure that any new data written will be added at the end. Note that file names must be in the 8.3 format – long file names are not currently supported.

The opened file is identified by a number (a "file handle"), in this case **#2**. You can use any number in the range of #1 to #10 and this number is then used by all subsequent operations to identify the opened file.

To write text to the file, it's just a matter of using the PRINT command. For example:

```
PRINT #2, "This line is saved in the file"
```

This is the same PRINT command that you use to display data on the console, the difference being that we have specified the file's identifier as the first argument. As a result, MMBasic will direct the data to the file rather than to the console. The print command is very flexible and by using that one command, you can save any data, including numbers, strings, the contents of variables, etc.

When you have finished with the file, you must tell MMBasic to close it. This will flush any buffered data and update the SD card's file index. For example:

```
CLOSE #2
```

Reading from a file is similar to writing. First you must open it:

```
OPEN "file.txt" FOR INPUT AS #5
```

This instructs MMBasic to find the file "file.txt" and prepare it for reading. There are a number of commands that you can use to read data but the easiest to understand is the **LINE INPUT** command which will read a line (terminated with a carriage return character) from the file and save it in a variable. For example:

```
LINE INPUT #5, D$
```

The first line from the file will be copied into string variable D$. You can see what is stored in the variable by printing it to the console. For example:

```
PRINT D$
```

Subsequent reads will move through the file, returning one line each time. You can detect when you have reached the end of the file using the function **EOF(#ref)**, which will return true if the end has been reached. When you are finished with the file, you close it using the **CLOSE** command described above.

The previous examples were for sequential access, where you write new data to the end of the file and read through it sequentially from the start. However, the Micromite Plus also supports random access which allows you to jump around in the file and change or read from any part of it. This is useful if you need to create a simple database or read a file out of sequence – see the **SEEK** and **LOC** functions listed in the accompanying panel.

Details on how to use these commands are in the Micromite Plus Addendum PDF.

Advanced graphics

The basic graphic commands and functions that are available on the standard 28 and 44-pin Micromites are also available on the Micromite Plus. In summary, these commands are:

CLS – Clear the screen.
PIXEL – Set the colour of an individual pixel.
LINE – Draw a line on the screen.
BOX – Draw a box on the screen. It

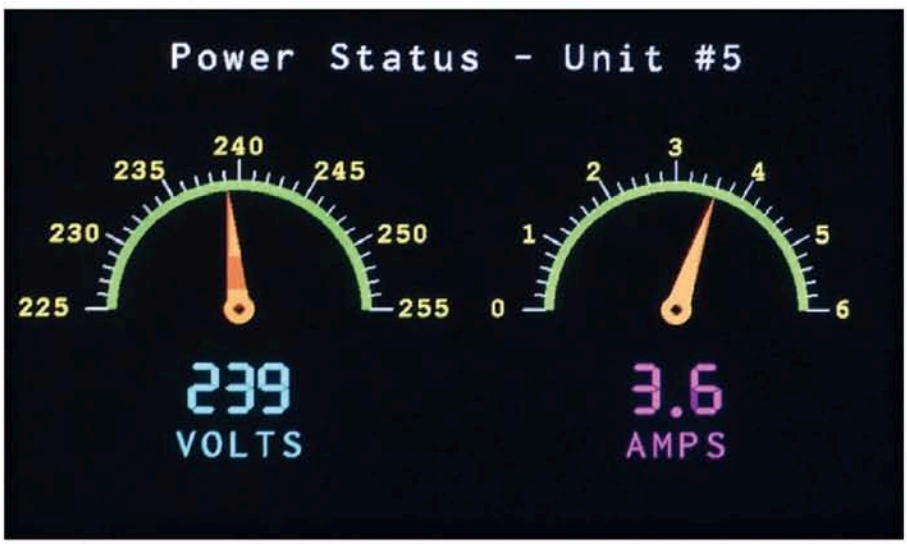

Fig.2: this is an example of a screen that was constructed using the standard graphics commands of the Micromite family (LINE, CIRCLE, etc). Images like this look very good because they are drawn at high resolution with a wide range of colours.

Fig.3: it's easy to show a lot of information on a single screen if using a large LCD panel. This is a simulation of an engine monitor and although you cannot see it in the photograph, the meters update in real time with a smooth response.

can be optionally filled with another colour.

RBOX – Draw a box with rounded corners. This can also be filled with a colour.

CIRCLE – Draw a circle with a specified aspect ratio. As with boxes, this can be filled with a specified colour.

TEXT – Display text in a specific font with a specified colour.

GUI BITMAP – display a bitmap.

Using these commands, you can create reasonably advanced graphical displays such as that shown in Fig.2 but it does take a lot of effort. However, the Micromite Plus offers an additional selection of commands that make it much easier to create control/management displays. A good example is shown in Fig.1 which is a demonstration of a pump controller.

The on-screen graphic elements (check boxes, switches, etc) are created and managed by MMBasic, which makes writing this type of program much easier. These are known within MMBasic as GUI controls. A control is an on-screen graphical element which is created by the program but is managed by MMBasic.

Fig.4: the SPINBOX control consists of a box displaying a number and up and down arrows at each end. It acts like a potentiometer; when either the up or down arrow is pressed, the number will increment or decrement by a set amount. If the touch is held down, the increment or decrement process will repeat at a fast rate.

Spin box

An example of a typical control is the "spin box", as shown in Fig.4. When the user touches the up or down icons, the number in the box will increment or decrement. Holding down either will cause the action to continuously repeat. This control is handy for setting the level of something and is the digital equivalent of a potentiometer.

To create this control, the BASIC program uses the following command:

```
GUI SPINBOX #ref, StartX, StartY, Width, Height, FColour, BColour, Step, Minimum, Maximum
```

This takes a number of parameters:
(1) **#ref**: this is a unique reference number in the range of 1-100 that identifies the control.
(2 & 3) **StartX and StartY**: these are the screen coordinates of the top left-hand corner of the control (including the up/down icons).
(4 & 5) **Width and Height**: the dimensions of the control (including the up/down icons).
(6 & 7) **FColour and BColour**: the colours used for the foreground and background when the control is drawn.
(8) **Step**: this is the amount by which the value in the spin box will change when the up and down icons are touched. It can be a fraction such as 0.1 or a whole number like 5.
(9 & 10) **Minimum and Maximum**: these are the limits for the value in the spin box. When they are reached, the up/down icons will not change the value beyond these limits. They are analogous to the end stops on a potentiometer.

When the **GUI SPINBOX** command is executed, MMBasic will draw the control on the LCD panel and the user can immediately start using it by touching the up/down icons. MMBasic will animate the control by illuminating the touched icons to provide visual feedback, updating the number displayed in the box and making a clicking sound (more on this later).

The animation is completely managed in the background by MMBasic. This allows the main BASIC program to be doing something completely different, eg, responding to changes in external sensor inputs.

Whenever the BASIC program needs to know the current value in the spin box, it can get this number using the **CTRLVAL(#ref)** function, where **#ref** is the reference number given to the control when it was created. For example

```
PRINT CTRLVAL(#40)
```

will display the current value of control number #40 on the console.

Often a program will also need to set the number in the spin box to some default value when the program is first run. This can be done with the following command, which can be executed at any time:

```
CTRLVAL(#ref) = number
```

This brief tutorial demonstrates all that is needed to create and use a GUI control within a BASIC program. MMBasic will do all the hard work while your program can be doing something more useful.

More controls

MMBasic provides 11 different controls, including the spin box. The other controls are:

Check Box – this is a check box with a caption. When touched, an X will be drawn inside the box to indicate that this option has been selected and the control's value will be set to 1. When touched a second time, the check mark will be removed and the control's value will be zero.

Push Button – a momentary button which is a square switch with a caption

on its face. When touched, the visual image of the button will appear to be pressed (on) and the control's value will be 1. When the touch is removed, the image will return to the off state and the value will revert to zero.

Switch – the switch control will draw a latching switch with a caption on its face. When touched, the visual image of the button will appear to be pressed and the control's value will be 1. When touched a second time, the switch will be released and the value will revert to zero.

Radio Button – this will draw a radio button with a caption beside it. When touched, the centre of the button will be illuminated to indicate that this option has been selected and the control's value will be 1.

Radio buttons are grouped together when surrounded by a frame (see below) and when one button in the group is selected, all the others in the group will be deselected. If a frame is not used, all buttons on the screen will be grouped together.

Frame – a frame is a box with round corners and a caption. It does not respond to touch but is useful when a group of controls need to be brought together. It can also used to surround a group of radio buttons and MMBasic will arrange for the radio buttons surrounded by the frame to be exclusive, as described previously.

LED – this is an indicator light (it looks like a panel-mounted LED) with a caption. When its value is set to non-zero it will be illuminated and when it is set to zero, it will be off (a dull version of its colour). If needed, the colour of the LED can be changed on the fly. The LED graphic does not respond to touch.

Display box – a box with rounded corners containing some text. Any text can be displayed in the box by using the **CTRLVAL(#ref) =** command. It does not respond to touch and is useful for displaying text, numbers and messages.

Caption – this will draw a text string on the screen. It is similar to the basic drawing command **TEXT**, the difference being that MMBasic will automatically manage this control by dimming or hiding it when needed.

Text Box – an advanced control that allows the user to enter text via an on-screen QWERTY keyboard. Normally, this control is just a rounded box containing some text but when touched, a full QWERTY keyboard will appear and all other controls will be dimmed and disabled – see Fig.5. Using this virtual keyboard, any text can be entered into the box, including upper/lower case letters, numbers and any other characters in the ASCII character set.

Number Box – a number box is similar to the text box described above except that when touched, it will display a numeric keypad on the screen. Using this virtual keypad, any number can be entered into the box including a floating point number in exponential format. The new number will replace the number previously in the box.

Click sound

When a control is touched, it is animated by MMBasic to provide visual feedback to the person touching it. To add to the impression that this is a

SD Card Functions

MMBasic on the Micromite Plus supports the standard BASIC commands for working with storage systems. This is a brief summary; the "Micromite Plus Addendum" PDF goes into more detail:

- OPEN fname$ FOR mode AS #fnbr – open a file for reading or writing.
- PRINT #fnbr, expression [[,;]expression] . . . etc – output text to the file opened as #fnbr.
- INPUT #fnbr, list of variables – read a list of comma separated data into the variables specified from the file previously opened as #fnbr.
- LINE INPUT #fnbr, variable$ – read a complete line into the string variable specified from the file previously opened as #fnbr.
- CLOSE #fnbr [,#fnbr] . . . – close the file(s) previously opened with the file number '#fnbr'.

Programs and images can be loaded from the SD card while programs can also be saved:

- LOAD fname$ [, R] – load a BASIC program from the SD Card. ",R" will cause the program to also be run.
- SAVE fname$ – save the current program to the SD card.
- LOAD IMAGE filename$ [, StartX, StartY] – loads a BMP image from the SD card and displays it on the attached LCD display.

Basic file and directory manipulation can be done from within a BASIC program:

- FILES [wildcard] – search the current directory and list the files/directories found.
- KILL fname$ – delete a file in the current directory.
- MKDIR dname$ – make a sub-directory in the current directory.
- CHDIR dname$ – change into to the directory dname$.
- RMDIR dir$ – remove or delete the directory "dir$" on the SD card.
- SEEK #fnbr, pos – will position the read/write pointer in a file that has been opened for RANDOM access.

There are also a number of functions that support the above commands:

- INPUT$(nbr, #fnbr) – will return a string composed of "nbr" characters read from a file previously opened for INPUT.
- DIR$(fspec, type) – will search an SD card for files and return the names of entries found.
- EOF(#fnbr) – will return true if the file with the file number #fnbr is positioned at the end of the file.
- LOC(#fnbr) – for a file opened as RANDOM, this will return the current position of the read/write pointer in the file.
- LOF(#fnbr) – will return the current length of the file in bytes.

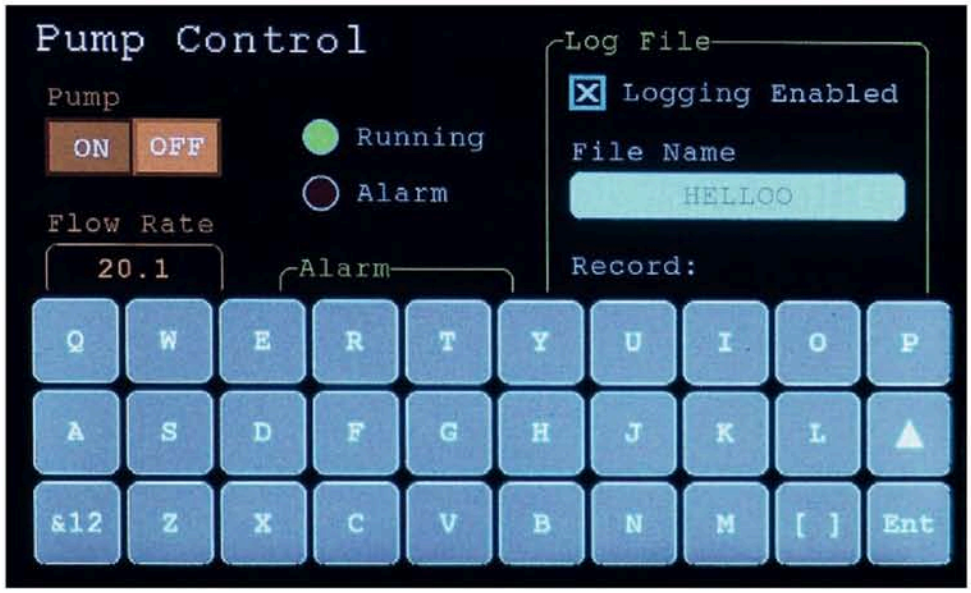

Fig.5: the Text Box control displays a full on-screen QWERTY keyboard when touched. This allows the user to enter any text using the full ASCII character set, including numbers and punctuation. The up arrow will shift lower/upper case and the "&12" key will change the keyboard to a number and punctuation layout. Note that the other objects on the screen are automatically dimmed to indicate that they cannot be used while the keyboard is on the screen.

physical object, MMBasic can also generate a click sound at the same time.

This is done by adding a standard piezo buzzer to an I/O pin and telling the Micromite Plus the pin number in the **OPTION TOUCH** command. Then, whenever a touch-sensitive control is touched, MMBasic will generate a short pulse on that pin to produce a simulated click sound.

Transistor driver

The I/O pins on the Micromite Plus do not have sufficient drive capability for most piezo buzzers, so you should use a transistor as the driver. The Explore 100 does this and it provides a good example of how to implement this feature.

Reference numbers

All controls are identified with a reference number when first created. This number is then used whenever you want to do something associated with the control. The number must be in the range of 1-100 which caters for up to 100 simultaneously active controls in a program.

For example, you might create a switch with a reference number of 41 and then later hide it:

```
GUI SWITCH 41, c$, x, y, etc
GUI HIDE 41
```

In a program with a lot of controls, using simple numbers can be confusing. For example, what do controls that have been designated 87 and 41 do?

For this reason, it is good practice to define the control reference numbers as a constant with a meaningful name. You can then use the name throughout your program and it will be obvious to the casual reader what the control does. For example:

```
CONST PwrSwitch = 41
GUI SWITCH PwrSwitch, c$, x, y, etc
GUI HIDE PwrSwitch
```

Interacting with controls

Most controls have a value which can be read and set. For example, you can read the value of a check box with the **CTRLVAL(#ref)** function. You can also set the value by assigning a value to the function (ie, using it as a command). For example:

```
CTRLVAL(#ref) = 1
```

will set the value of the check box to true **and** cause the visual image of the check box to be checked – just as if the user had touched the on-screen check box. This is useful when setting defaults and interacting with other controls.

The value returned by this function depends on the control; for some it is a number and for others it is a string. MMBasic will automatically return the correct type of data and will also expect the correct type of data when you are setting a value. For example, setting the value of a frame will change the caption of the frame (which is a string) and therefore you must supply a string.

YouTube Video

The author has produced a video which describes and demonstrates the capabilities of the Micromite Plus. You'll find it at:
https://youtu.be/j12LidkzG2A

Modifying a control

There are a range of commands and functions that you can use to modify a control after it has been created. They include:

GUI FCOLOUR – changes the foreground colour of the control. This is especially useful for the LED control.

GUI BCOLOUR – changes the background colour of a control.

GUI DISABLE – disables one or more control(s). Disabled controls do not respond to touch and will be dimmed on the screen.

GUI ENABLE – undoes the effects of GUI DISABLE and restore the control(s) to normal operation.

GUI HIDE – hides one or more control(s). Hidden controls will not respond to touch and will be replaced on the screen with the current background colour (ie, they are erased).

GUI SHOW – undoes the effects of **GUI HIDE** and restores the controls to full visibility and normal operation.

GUI DELETE – deletes one or more controls. This includes removing the image of the control from the screen and freeing the memory used by the control.

Next month

That's it for now. Next month, we'll get into more advanced topics such as touch interrupts, screen pages and message boxes. **SC**

First PIC32 MCUs with Core Independent Peripherals

Overcoming Cost, Power and Size Limitations with PIC32MM MCUs

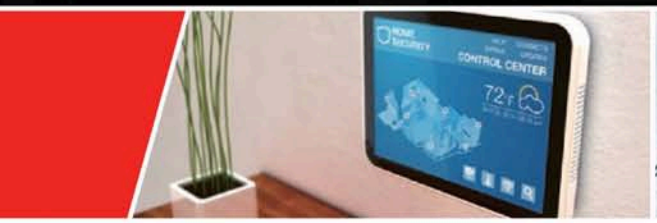

As the first PIC32 microcontrollers to offer Core Independent Peripherals, the PIC32MM family delivers cost-effective, low-power embedded control for IoT, consumer, industrial and sensorless BLDC applications.

The Core Independent Peripherals, such as Configurable Logic Cells (CLCs) and Multiple Output Capture Compare PWMs (MCCPs), offload tasks from the CPU to deliver lower power consumption and lower design complexity. Additional power savings, enabled by low-power sleep modes, plus small, 4 × 4 mm package options support longer battery life in space-constrained applications.

Contact Information
Microchip Technology Australia
Email: aust_nz.inquiry@microchip.com
Phone: +61 (2) 9868-6733

www.microchip.com/PIC32MM

microchip DIRECT
www.microchipdirect.com

MICROCHIP

The Microchip name and logo and the Microchip logo are registered trademarks of Microchip Technology Incorporated in the U.S.A. and other countries. All other trademarks are the property of their registered owners. © 2016 Microchip Technology Inc. All rights reserved.

By Nicholas Vinen

Based on Geoff Graham's Micromite Plus & Micromite LCD BackPack

The Micromite Plus LCD BackPack

The Explore 64 and the Micromite LCD BackPack have had an illicit affair and here are the secret baby photos to prove it! It has its mother's eyes and father's brain. OK, that's not really true; what we have done is taken the best features of each project and put them together onto a single board. Use it to supercharge your BackPack project or just as a convenient and cost-effective controller module.

READERS WILL have noticed that we've published a number of projects based on the Micromite LCD BackPack, first described in our February 2016 issue. It's a very convenient way of providing user control and feedback for a project and combines the user interface and control logic in a compact module. Because it doesn't cost too much, we can integrate it into a larger project without making it overly expensive. And thanks to Geoff Graham's MMBasic interpreter, constructors can easily upgrade and modify our designs.

As it stands, the biggest problem with the BackPack is the limitation of the DIP (through-hole) PIC32 processor. It has significantly less flash memory and RAM and a much lower operating frequency compared to the surface-mount versions. The BASIC interpreter overhead exacerbates all of these. It also lacks the SD card and USB interfaces introduced with the Micromite Plus in the August issue.

The micro used in the Micromite Plus Explore 64/100 projects puts the original to shame, with a much more generous helping of RAM and flash, much better speed (2.5 times as fast) and sufficient spare memory and pins to implement onboard microSD card and USB interfaces. But while the Explore 64 can interface with many different displays, you have to wire it up yourself and the 5-inch touchscreen is quite expensive. So those projects can't easily replace the LCD BackPack.

But this one can! We have combined the convenience and low cost of the original BackPack with all those new Micromite Plus features. The Micromite Plus LCD BackPack uses the same 2.8-inch touchscreen TFT as before but has the enhanced processor and peripherals of the Explore 64.

Backwards compatibility

One of the main aims when designing the Plus BackPack was to make it

easy to improve projects that used the original BackPack. The original BackPack has three main connectors: one for 5V power and the serial terminal (CON1, four pins), one for the TFT interface (CON3, 14 pins) and one for interfacing to external circuitry (CON2, 18 pins). It also has an in-circuit serial programming (ICSP) connector for the microcontroller (CON4, six pins).

On the Micromite Plus LCD BackPack, we have fitted identical connectors, with the same names, positions and sizes. The PCB is the same size too, with mounting holes in the same positions. So it's largely a "drop-in" replacement.

There are differences, however, in some of the pin numbers and properties assigned to these connectors. Going through each connector in turn, these differences are:

- CON1: the pinout is still 5V/Tx/Rx/GND, however the Micromite Plus uses pins 58 and 6 as the console Tx and Rx, compared to pins 11 and 12 on the original Micromite and the Micromite Mk2. However, the difference in these pin numbers should not affect usage at all.
- CON2: we have kept the functions of each pin in this I/O header as close as possible to those for the original BackPack. However to keep the functions identical, we had to change most of the pin numbers. That means that you will need to change the software to use the new pin numbers – see Table 1 for a comparison. Note that this same information is also shown in the circuit diagram which is discussed below.

There are only two small losses of function in this header (this was unavoidable). First, pins 8 and 11 are no longer 5V-tolerant and second, pins 9 and 10 can no longer operate as count inputs. But there are two extra benefits to the new configuration: four new analog-capable inputs at pins 5, 6, 8 and 11 and the SPI bus is no longer shared with the one driving the TFT and touch sensor.

- CON3: this is intended to plug into the same ILI9341-based TFT display as the original BackPack. The pin functions are essentially the same although again, some of the numbers have changed and thus the display/touch initialisation commands have changed (we'll go over this later). Table 2 shows how the pins are connected to the display board on both the original and new designs.

Features & Specifications

- Display: 65,536 colour, 2.8-inch (7cm) diagonal TFT LCD with 320 x 240 pixel resolution and software backlight brightness control
- Input system: resistive touchscreen
- Processor: Microchip 32-bit 120MHz microcontroller with 512KB flash memory and 128KB RAM
- Available memory: 100KB flash program space, 100KB RAM
- I/Os: 31 free input/output pins including 17 analog inputs, 14 5V-tolerant pins, hardware SPI and I^2C buses, two (or three) serial ports, four PWM outputs, a PS/2 keyboard interface, three frequency counting inputs, a wake-up pin (for sleep mode) and an infrared input pin
- Digital I/O current capability: 15mA sink/source
- Communications protocols: SPI, I^2C, asynchronous serial, RS-232, IEEE 485 and Dallas 1-Wire
- USB support: Integrated USB 2.0 interface with virtual serial port
- SD card support: handles cards up to 64GB with onboard microSD socket and SD card socket on back of display module
- Interpreter: Built-in MMBasic with support for 64-bit integers, floating point, strings, arrays and user-defined subroutines and functions
- Standard Micromite features: includes built-in communications protocols, PWM and SERVO outputs, variable CPU speed, sleep mode, watchdog timer and automatic start & run
- Additional features: built-in support for infrared remote receivers, temperature sensors, humidity sensors, distance sensors, numeric keypads and battery-backed real-time clocks
- Graphics commands: CLS, PIXEL, LINE, BOX, RBOX, CIRCLE, TEXT and BITMAP, using the full range of colours
- Advanced graphics commands: these include on-screen keyboards, buttons, switches, check boxes and radio buttons
- Font support: six built-in fonts plus the ability to load custom user fonts
- Code editing: on-screen editor support when PS/2 keyboard is connected
- Power supply: 5V (4.5-5.5V) @ 80mA (backlight off) up to 250mA (backlight at full brightness)
- Dimensions: 50 x 86 x 27mm (same as original LCD BackPack)
- Compatibility: connector positions and pin-outs compatible with original LCD BackPack
- Overall cost: similar to original LCD BackPack

As noted earlier, the SPI2 bus is used for the TFT (this is required by MMBasic) while the SPI1 bus is connected to CON2, for interfacing with external circuitry. This has a major advantage compared to the original BackPack as MMBasic's use of the SPI bus for graphics commands and touch sensing will not interfere with SPI data sent via CON2. This is especially helpful when using touch interrupts or using the SPI bus or graphics commands in interrupt handler routines.

Another major improvement over the original BackPack is the deletion of VR1 for TFT backlight control. The backlight is now driven by a Mosfet which can have its gate controlled via the PWM2A output for software-controlled dimming over a wide range. The backlight can be turned off entirely when not used, which is especially helpful for battery-powered devices as it typically draws most of the supply current.

- CON4: the ICSP header is connected to PGED1/PGEC1 in both versions, which are pins 4 and 5 on the original

Table 1: CON2 Functions In Original BackPack vs Plus BackPack

Pin Number	Original BackPack	Plus BackPack
1	RESET	RESET
2	3 SPI OUT	8 SPI1 OUT
3	4	12
4	5	14
5	9 COM2:TX	11 COM2:TX
6	10 COM2:RX	13 COM2:RX
7	14 SPI IN	45 SPI1 IN
8	16 COUNT/WAKEUP/IR	51 COUNT/WAKEUP/IR
9	17 COUNT/I²C CLOCK	44 I²C CLOCK
10	18 COUNT/I²C DATA	43 I²C DATA
11	21 COM1:TX	15 COM1:TX
12	22 COM1:RX	59 COM1:RX
13	24	24
14	25 SPI CLK	50 SPI1 CLK
15	26	27
16	+3.3V	+3.3V
17	+5V	+5V
18	GND	GND

Note: blue indicates analog pin. Red indicate 5V-tolerant pin.

Table 2: CON3 Functions In Original BackPack vs Plus BackPack

Pin Number	TFT Pin	Original BackPack	Plus BackPack
1	VCC	+5V	+5V
2	GND	GND	GND
3	CS-bar	6 PWM1C	29
4	RESET	23	23 COUNT
5	D/C	2	2
6	SDI (MOSI)	3 SPI OUT	5 SPI2 OUT
7	SCK	25 SPI CLK	4 SPI2 CLK
8	LED (backlight)	to VR1	to pin 53 (PWM2A) via Q1 & Q2
9	SDO (MOSI)	14 SPI IN	47 SPI2 IN/PWM2B
10	T_CLK	25 SPI CLK	4 SPI2 CLK
11	T_CS	7 COM1:ENABLE	1
12	T_DIN	3 SPI OUT	5 SPI2 OUT
13	T_DO	14 SPI IN	47 SPI2 IN/PWM2B
14	T_IRQ	15 COUNT	3

BackPack and pins 16 and 15 on the Plus BackPack. On the original BackPack, these pins were also routed to CON2 and so the external circuit design had to take this into account if the chip could be re-programmed in-situ.

In contrast, on the Plus BackPack, only pin 11 on CON2 (pin 21 of the micro, COM1:TX) is so affected. The other programming pin is routed to new header CON5 and will rarely be used.

So in summary, to adapt software designed for the original LCD BackPack to the Plus BackPack, I/O pin numbers will need to be adjusted and you will need to ensure that you use the SPI1 bus and that pins 8 and 11 of CON2 are not required to be 5V-tolerant.

New features

Five new connectors have been added, with the following functions:

- CON6: since the Micromite Plus has many more I/O pins than the original Micromite, we've added this extra 21-pin header to give access to most of those additional pins, for projects which may exhaust the connections available on CON2. This connector's pin-out has some similarities to CON6 on the Explore 64. However, we've had to use a number of different pins here because the others were already in use for other purposes.

In summary, the pins on CON6 consist of nine analog-capable inputs, 11 5V-tolerant digital inputs, four PWM-capable outputs, two pins which can be used to connect a PS/2 keyboard, two counting inputs plus the same 3-pin SPI bus which is wired to CON2. Note that besides this shared SPI bus, none of the other pins are used for any other purpose and thus you are free to do what you like with them (with one slight exception, see the following section).

- CON5: this 3-pin header provides a convenient place to connect to the COM3 Tx/Rx pins (16 & 17 on IC1) as well as pin 33, if it is not being used as USBID (ie, if shorting block SB1 is not shorted). Unless you need to use the COM3 port, you're unlikely to need this header and it can be left off.

Note that pins 16 & 17 are already connected to CON4 and CON6 respectively, however since CON4 is for in-circuit programming, you would not want to connect a COM port there. Note also that pin 33, USBID is only really needed for "USB on-the-go" (USB OTG) which would probably require a different connector for CON8 and thus is most useful as a 5V-tolerant general purpose digital input; it can not operate as an output.

- CON7: this allows the use of the SD card socket on the TFT module. To use this, you need to fit a 4-pin female socket in this location and a matching pin header on the back of the TFT module. The SD card's CS-bar, MOSI, MISO and SCK lines are routed to pins 21, 5, 47 and 4 on IC1 respectively. Since the latter three pins are SPI2 OUT, SPI2 IN and SPI2 CLK, this makes interfacing

with an SD card easy; the commands to do this are shown later.

Power for the SD card on the TFT module comes from a 3.3V regulator (on the module) that draws from the 5V supplied via CON3. So one advantage of using that SD card socket is that it doesn't reduce the current available from the 3.3V rail on the BackPack PCB.

- CON8: the onboard USB socket which can be used as a serial console. It's quite convenient since all you need is a USB Type-A to microUSB cable to communicate with the Micromite Plus. However as noted in the earlier articles on the Micromite Plus, it has the disadvantage that the console is reset whenever the micro is reset (eg, when S1 is pressed). However, our experience has been that this is not necessary very often so you certainly can program the Micromite Plus via this port.

If JP1 is fitted, then the unit will be powered from this cable as well but take care that you don't back-feed 5V into the USB port since this could damage your PC. **In other words, only fit JP1 if you are not powering the board from any other source.**

The alternative to using CON8 for programming and communications is to use a USB/serial adaptor (as explained in multiple previous articles) and wire it up to CON1 (see Fig.3). This will allow the serial port to continue operating even if the Plus BackPack is reset. Power can also be supplied to the board via CON1, with the same proviso as above.

- CON9: the onboard microSD card socket. This is wired in parallel with CON7 so if using this, you can't use the SD card socket on the TFT module and vice versa.

The card is powered directly from the onboard 3.3V supply (from low-dropout linear regulator REG1) and is provided with a 10µF bypass capacitor. The only additional connection is from pin 22 of IC1 to the card detect switch on the socket. Later on, we'll show the command to configure the Micromite to use this pin to detect card insertions and removals.

Circuit description

The full circuit of the Micromite Plus BackPack board is shown in Fig.1. It consists mostly of microcontroller IC1 and its connections to CON1-CON9, so essentially we have already described most of it above. But let's go over a few details.

IC1 has a 20MHz crystal connected between oscillator pins 39 and 40, with 22pF load capacitors. Its 100MHz or 120MHz clock signal is derived from this using an internal PLL (phase-locked loop) frequency multiplier that's configured by the MMBasic software. A 10µF ceramic capacitor from pin 56 to ground stabilises its internal core supply rail.

Display backlight control is via IC1's output pin 53, referred to in MMBasic as PWM 2A. Note that the PWM 2B function is shared with SPI2 IN, which is already dedicated to the display interface, so there is no issue with interaction between these two PWM functions that share the same timer. Pin 53 drives the gate of N-channel Mosfet Q2, which has a 10kΩ pull-down resistor so that it is held off when the microcontroller is powering up, reset or not operating for some other reason.

When pin 53 goes high, Q2 switches on and this pulls the gate of P-channel Mosfet Q1 low. It is normally held high by a 1kΩ resistor from the 5V rail. When the gate of Q1 is pulled low, Q1 switches on, allowing power to flow from the 5V rail into the backlight LED anode pin, marked LED on CON3. The higher the duty cycle of the PWM sig-

Parts List

1 double-sided PCB, code 07110161, 86 x 50mm
1 ILI9341-based LCD module, 320 x 240 pixels, 2.8-inch diagonal, with touch controller
1 right-angle, through-hole, tactile pushbutton switch, short actuator (S1)
1 20MHz crystal, low profile HC-49 (X1)
2 4-pin headers, 2.54mm pitch (CON1 & SD card connector on display module)
1 18-pin header, 2.54mm pitch (CON2)
1 14-pin female header, 2.54mm pitch (CON3)
1 6-pin right-angle header, 2.54mm pitch (CON4; optional)
1 3-pin header, 2.54mm pitch (CON5; optional)
1 21-pin header, 2.54mm pitch (CON6)
1 4-pin female header, 2.54mm pitch (CON7)
1 SMD mini USB type B socket (CON8) (Altronics P1308 or similar)
1 microSD card socket (CON9) (Altronics P5717 or similar)
1 2-pin header, 2.54mm pitch, with shorting block (JP1)
4 M3 x 12mm tapped spacers
4 M3 x 6mm machine screws
4 M3 x 8mm machine screws
4 Nylon washers, 3mm ID, 6mm OD, 1mm thickness
1 laser-cut jiffy box lid and UB5 jiffy box (optional)
1 USB-to-serial adaptor and jumper leads (optional, see text)
1 5V regulated power supply (see text)

Semiconductors
1 PIC32MX470F512H-120/PT microcontroller programmed with 0710816A.HEX (IC1)
1 MCP1703A(T)-3302E/DB low-dropout 3.3V regulator, SOT-223 (REG1)
1 MCP120(T)-270I/TT 2.7V supply supervisor, SOT-23 (IC2; optional – see text)
1 DMP2215L P-channel Mosfet, SOT-23 (Q1)
1 2N7002 N-channel Mosfet, SOT-23 (Q2)
1 green SMD LED* (LED1)

Capacitors*
4 10µF 6.3V ceramic, X5R or X7R
6 100nF 50V ceramic, X5R or X7R
2 22pF ceramic, C0G/NP0

Resistors (1% or 5%)*
2 10kΩ
2 1kΩ
1 470Ω
1 10Ω

* Use SMD 3216 (1206 imperial) size; 2012/0805 sizes are also suitable but are not recommended for beginners

Where to buy parts

A complete kit for the Micromite Plus LCD BackPack will be available from the SILICON CHIP online shop, along with suitable laser-cut lids and separate items such as the PCB and programmed microcontroller.

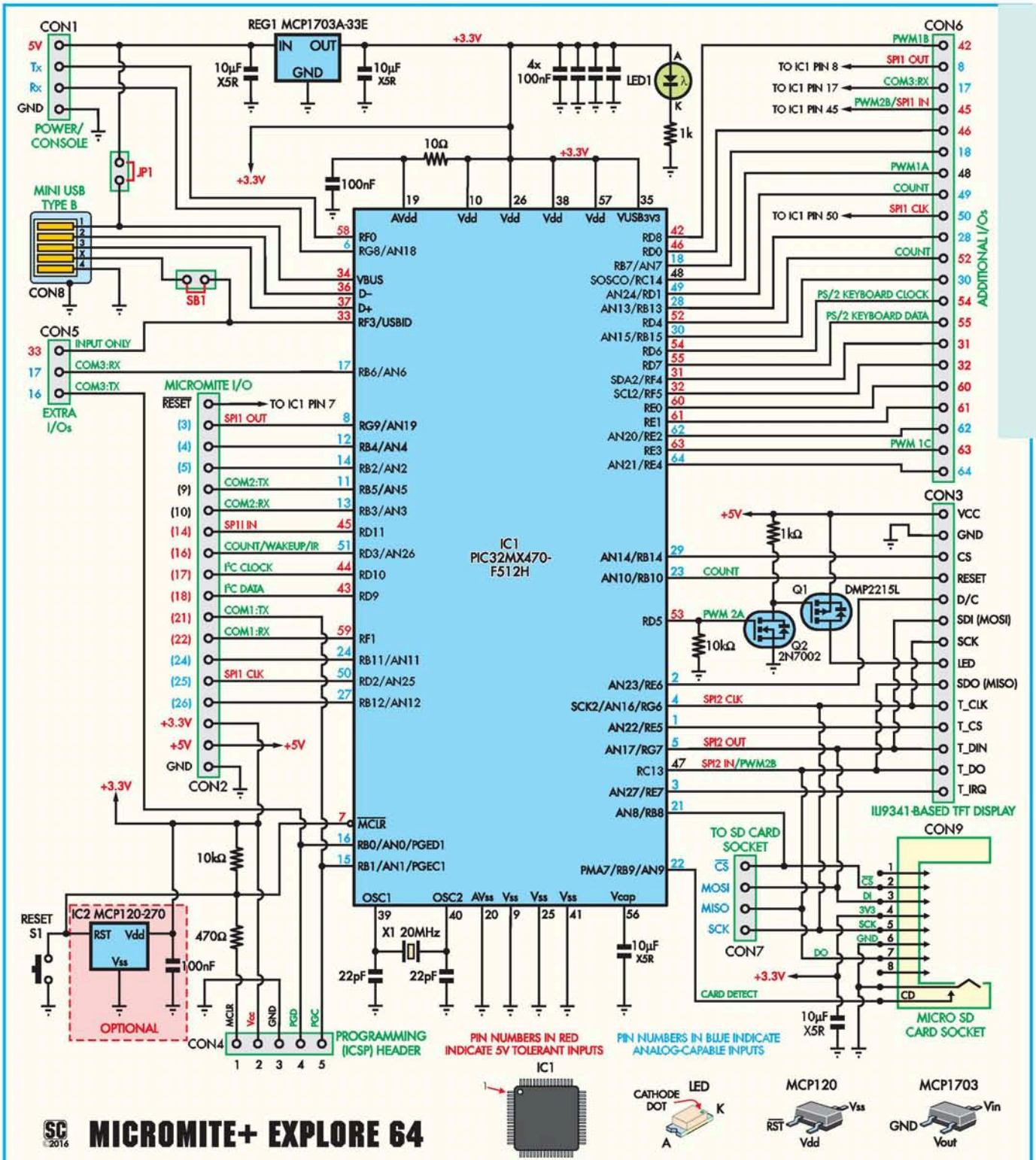

Fig.1: the complete circuit diagram for the Micromite Plus LCD BackPack. It's primarily composed of PIC32 microcontroller IC1, which is programmed with the Micromite Plus firmware, plus connectors CON1-CON9 which give access to the I/O pins, interface with the touchscreen and provide the USB, serial and SD card interfaces. Mosfets Q1 & Q2 provide display backlight dimming while REG1 derives IC1's 3.3V supply from the externally supplied, regulated 5V rail. Pin numbers shown in parentheses refer to the original LCD BackPack.

nal from pin 53, the brighter the backlight. Commands to control the backlight will be shown later.

The $\overline{\text{MCLR}}$ reset input of IC1 is held high by a 10kΩ pull-up resistor from the 3.3V rail, preventing spurious resets. The chip can be reset either by pressing onboard tactile pushbutton switch S1 or by pulling pin 1 of CON4 low. A 470Ω series resistor limits the current drawn from this pin when S1 is pressed.

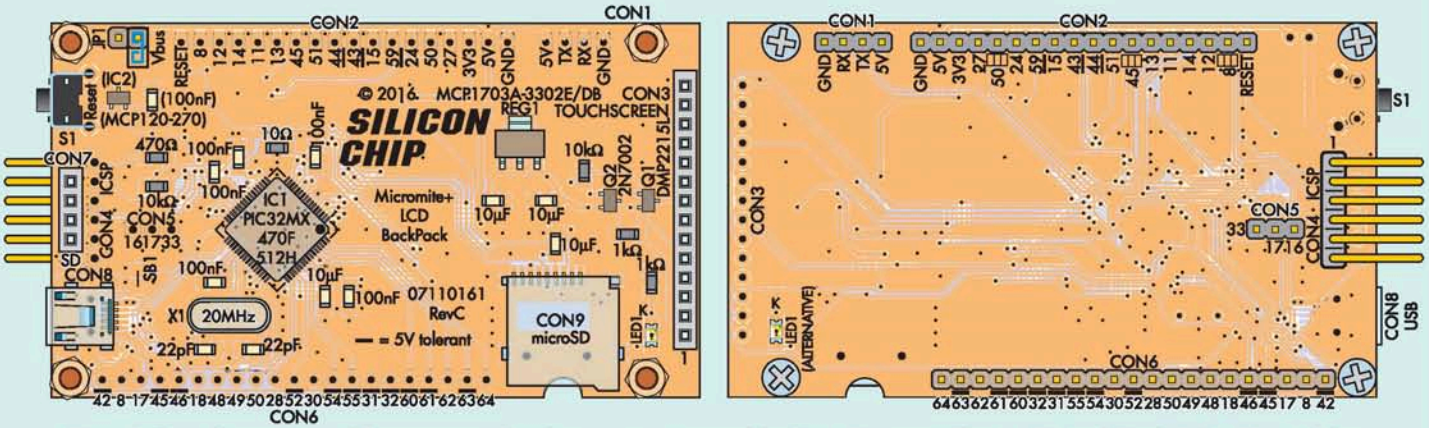

Fig.2: follow these top and bottom overlay diagrams to assemble the Micromite Plus LCD BackPack PCB. Most of the parts are SMDs and are fitted to the top side which later faces the rear of the attached LCD module. I/O connectors CON1, CON2, CON5 and CON6, along with in-circuit programming header CON4, are fitted to the other side. Reset switch S1, USB socket CON8 and microSD card socket CON9 are accessed via the edges of the module.

Like the LCD BackPack and Explore 64, the Plus BackPack has provision for IC2, an MCP120 2.7V supply supervisor which will reset IC1 should the nominally 3.3V supply drop below 2.7V. Normally, this is not necessary, however it may prevent the unit from misbehaving in a harsh environment. If you want to fit the MCP120, the only other component you need is fit is its adjacent 100nF bypass capacitor.

Power supply

The unit is intended to be powered from an external regulated 5V supply. The acceptable voltage range is 4.5-5.5V which means that the USB port of a PC or a USB charger is quite suitable for powering the Plus BackPack, either via CON8 or flying leads connected between pins 1 and 4 of CON1.

Current drain is up to 250mA with full brightness on the display backlight and the Micromite running at full speed. With the display backlight off, the supply current is more like 80mA and this can be reduced if the Micromite is in sleep mode or running at less than maximum speed.

Note that you must not use an unregulated 5V supply as these can easily reach over 6V which is the threshold for damage to REG1 and possibly other components (eg, the display module). REG1 is a 250mA 3.3V low-dropout regulator which can deliver the rated 250mA with just 3.925V at the input. Its own supply current is just 2µA with a light load. It has 10µF input bypass and output filter capacitors.

IC1 has five 100nF bypass capacitors, located near its five supply pins, with a 10Ω resistor to help filter its analog supply (AVDD). Finally, LED1 indicates when power is present and is fed with around 1mA thanks to its 1kΩ series current limiting resistor. Note that pads are provided to mount LED1 on either side of the PCB, depending on your preference.

PCB design

The Micromite Plus LCD BackPack is built on a double-sided PCB measuring 86 x 50mm which is identical to the size of the original Micromite LCD BackPack. Most of the components are on one side, which ends up facing the back of the display module. Fig.2 shows the details.

Besides routing all the tracks from IC1 to the various connectors, our main goal was to keep high-speed signals separated to prevent cross-talk and to provide a low-resistance ground plane across the whole board to minimise EMI and inductive coupling between tracks. As such, it is studded with numerous vias between the top and bottom layer ground planes, including many under IC1.

CON3 and CON7 are located to plug straight into the display module and the four mounting holes are spaced to suit that module too. CON1, CON2 and CON6 can either be mounted on the back of the module or on the display side but using right-angle headers. CON5 can be left off in most cases and if you only need a few I/O pins, you don't need to fit CON6 either.

The microSD card socket, CON9, is best used for permanent storage such as graphics or program data; it may be possible to design a case to allow access to insert and remove this card from outside but it would be difficult. This would be easier to arrange with the SD card socket on the display module, as the larger full-size SD card protrudes much further.

CON4 would normally be fitted as a right-angle header on the bottom of the board as shown on Fig.2, to reduce the overall height of the module, although there's nothing stopping you from using a straight header should you wish. CON8 and S1 are easily accessed from the side of the module, despite being mounted between the two boards, although note that a cable plugged into CON8 may interfere with plugging a PICkit 3 into CON4 if using a right-angle header.

Should you wish to mount some sort of "shield" on the back of the BackPack module (like we did in the Touchscreen Voltage/Current Reference in next month's issue), the four mounting positions can be used to attach spacers on either side of the board.

Construction

Construction is quite similar to the Micromite Plus Explore 64 as we are using mostly the same parts. The only slightly tricky components to fit are IC1, CON8 and CON9 as these have relatively close pin spacings. The other components either have wide spacings or are conventional through-hole types.

The essential tools are a good magnifier, plenty of flux and a steady hand. The magnifier needs to be at least x3 power and preferably x10. A jeweller's

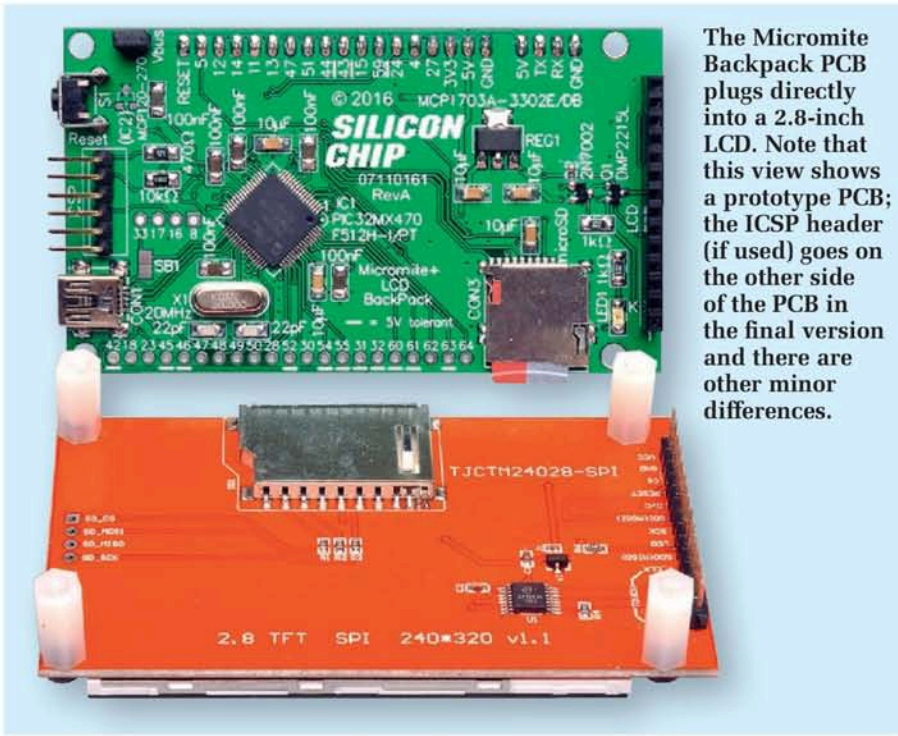

The Micromite Backpack PCB plugs directly into a 2.8-inch LCD. Note that this view shows a prototype PCB; the ICSP header (if used) goes on the other side of the PCB in the final version and there are other minor differences.

loupe can be used but the best option is a stereo microscope and SILICON CHIP reviewed some good candidates in the July 2014 and November 2015 issues. The flux should be a good quality flux paste/gel such as Cat. H1650A from Altronics or Cat. NS3036 from Jaycar.

Fig.2 shows the parts layout on the Plus BackPack PCB. The first step is to install microcontroller IC1. Apply flux to all of its pads, then position the chip so that its pin 1 (marked with a dimple) is lined up with the pin 1 marking on the PCB. Then hold it in position using a toothpick or tweezers and solder one corner pin.

An alternative technique is to first apply solder to one pad, then heat the solder on that pad while quickly sliding the IC into place, after which you lift the iron off the board. This requires more practice but you can make several attempts, as long as you avoid spreading the solder onto adjacent pins.

Now check that the IC is correctly aligned; if not, re-melt the solder while gently nudging it into position. Once it's in position, apply more flux to all the pins and solder each one in turn, then recheck the first pin and add fresh solder if necessary.

The technique here is simple; put a very small amount of solder on your iron's tip, touch the tip to the solder pad and slide it forwards to gently touch the first pin. The solder should freely flow around the pin and the pad. You should then be able to solder at least 15 more pins (one side of the IC) before you need to add more solder to the iron.

The secret is to be generous with the flux, as this will allow the solder to flow freely onto the pads and their corresponding pins. Alternatively, if you have a mini-wave tip or a very steady hand, with sufficient flux in place, you can drag solder across one side (16 pins) in a single movement.

Often you will find that you are actually soldering two or more pins simultaneously but the solder will not usually bridge the pins. If it does, this is an indication that you have too much solder on your iron. If any pins are bridged, come back later with solder wick (and more flux) and remove the excess.

The SD card connector is next on the list. It's located on the PCB by two small plastic pins that match two holes on the board. Solder its four mounting lugs first, followed by the signal pins. These pins are soldered using the same technique as for IC1.

Note that the SD card connector's pins are fragile and the plastic they are embedded in will melt if too much heat is applied, so only touch the soldering iron to the pins for a very short time. As before, apply plenty of flux before soldering.

The mini USB connector can now go in. It also has locating pins to position it correctly. You may have to push it down firmly for it to sit flush with the board. Once again, solder the mounting lugs first and then the signal pins. These are a bit of a challenge as they are partially under the connector's body and you will need a fine-tipped soldering bit to reach them; we have extended the pads outside the body to make this easier.

You can now solder REG1 in place. This has a large tab which connects to the copper ground plane on the PCB. Start by applying flux to all four pads, then slide it into place and solder one of the smaller leads before checking the positioning. Once you're happy, solder the other smaller leads and finally the large tab. It may take a few seconds to heat the part and PCB up enough to get a good solder joint on that tab.

Follow with small Mosfets Q1 and Q2. These devices have wide pin spacings and heat up quite fast, so you should have them in place pretty quickly. If fitting the optional supply supervisor, IC2, which also comes in an SOT-23 package, whack that on now as well.

Passive SMD components

Soldering the passive SMD components requires a slightly different technique. Start by applying flux to one solder pad and then tin it by applying a thin layer of solder to it. That done, you have two choices.

First, you can place the component in position and hold it still with a toothpick or tweezers while you apply the iron's tip to the end sitting on the tinned pad and the component lead will sink into the solder underneath. Alternatively, you can slide the component into place while heating the solder on the pad. The second technique will probably require more practice but it may be quicker once you get used to it.

Either way, once the component is secure, apply more flux and solder the other end before returning to the first to make sure that the joint is good. Once again, the secret is to use plenty of flux and don't forget that it may have boiled off one of the pads while you were soldering the other end of the component, so keep reapplying it.

Solder the six resistors and 12 capacitors using this method.

LED1 (the power indicator LED) is the last SMD to be fitted. This device

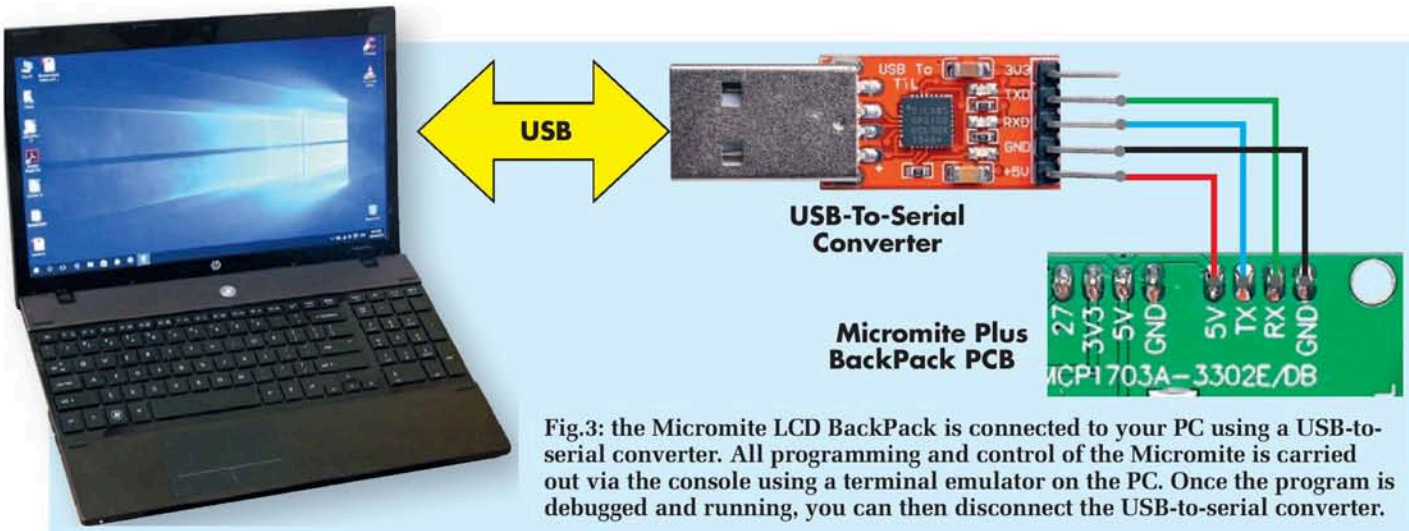

Fig.3: the Micromite LCD BackPack is connected to your PC using a USB-to-serial converter. All programming and control of the Micromite is carried out via the console using a terminal emulator on the PC. Once the program is debugged and running, you can then disconnect the USB-to-serial converter.

is polarised and should be marked with a bar or dot on the cathode end. Some LEDs might be different so it is a good practice to use a multimeter's diode test facility to check the polarity. Solder it in place with the cathode towards the top edge of the board, as shown in Fig.2.

It's up to you whether to put it on the same side of the board as the other SMDs, where it will ultimately face towards the front of the unit (ie, aimed at the back of the TFT module) or on the other side, where it will be more visible but facing the back of the unit.

Through-hole components

Install crystal X1 using the usual method. PCBs supplied by Silicon Chip will have solder mask over the top side of the mounting pads so it should be possible to push the crystal can right down onto the PCB surface before soldering it.

Next comes tactile pushbutton S1, which is soldered into place with its actuator sticking out (barely) over the edge of the PCB. Push its pins all the way down before soldering them. Now you can solder headers CON3 and CON7 in place, on the same side as the other components. You may find it best to temporarily plug in the TFT module and attach it using the tapped spacers to ensure these are positioned correctly.

Now you can solder CON1, CON2 and optionally CON4, CON5 & CON6 to the opposite side of the PCB. Make sure they're all straight and flat on the board before soldering more than two pins.

JP1 can go on either side of the board. We've shown it on the side that will face the TFT module but this does make it difficult to change when the display module is in place (which may or may not be a good thing).

Finally, it's time to attach the TFT module. Use M3 x 6mm machine screws to attach M3 x 12mm tapped spacers to each mounting hole, with the spacers on the same side as CON3 and CON7. Then plug the module into both CON3 and CON7 (noting that you'll need to fit the 4-pin male header on the TFT module, as it comes without it). Attach the module to the spacers using the slightly longer machine screws, with the Nylon washers under each screw head. These will be used as spacers later if you decide to attach the whole thing to the lid of a box or case.

Loading the firmware

Programmed PIC32s are available from the Silicon Chip Online Shop and will be supplied with any Micromite Plus LCD BackPack kits purchased. If using a blank PIC32 chip, you will need to program it yourself. In this case, you will need a suitable programmer such as a PICkit 3 from Microchip. This can be used to program IC1 via CON4.

The first step is to download the firmware from the Silicon Chip website and extract the Micromite Plus hex file (ie, the firmware). It's then just a matter of using your computer and the MPLAB software supplied with the PICkit 3 (or downloaded from Microchip) to program the hex file into the microcontroller; see page 26 of the February 2016 issue for further details.

During this procedure, the PICkit 3 will verify the programming operation by reading back the data on the chip. If it reports a fault, you will need to fix that before progressing. Usually, though, the programming operation will be verified as OK, indicating that the PIC32 has been correctly programmed.

Serial console

To set up and use the Plus BackPack, you must connect a terminal emulator to its console. The console is a serial interface over which you can issue commands to MMBasic to configure the chip and edit or run programs. MMBasic also uses the console to display error messages.

As mentioned earlier, the Plus BackPack actually has two consoles, one serial and one USB. A USB-to-serial converter is required in order to use the hard-wired serial console. One end of this converter plugs into a USB port on your computer, while the other end connects to the Micromite's serial console – see Fig.3. To your computer, it will look like a serial port (via USB), while the connection to the Micromite Plus is a standard serial interface with TTL (0-3.3V) signals levels.

JP1 must be installed if you want to power the Plus BackPack via CON8. However, it must NOT be fitted if you are powering the unit externally and if there's any chance you will use CON8 to access the USB console. So check whether your fitting of JP1 is correct before proceeding.

We recommend converters based on the CP2102 chip. These are available from the Silicon Chip online shop at www.siliconchip.com.au/Shop/7/3437 They are each supplied with a short DuPont female/female cable which plugs straight into the Plus BackPack board.

Fig.3 shows how a CP2102-based

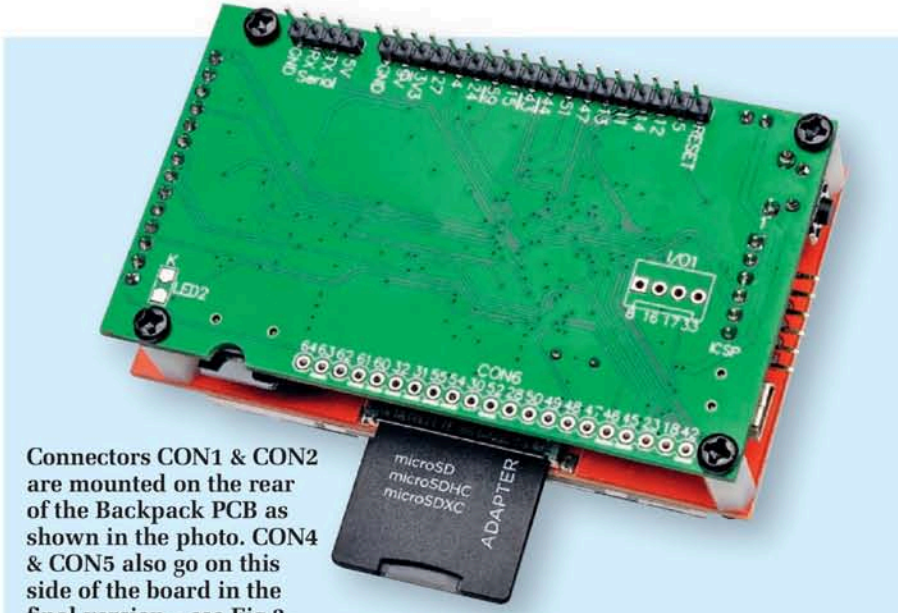

Connectors CON1 & CON2 are mounted on the rear of the Backpack PCB as shown in the photo. CON4 & CON5 also go on this side of the board in the final version – see Fig.2.

converter is connected to the BackPack (other types should be similar). Note that the converter feeds through the 5V supply rail derived from the PC's USB port to power the Plus BackPack.

When the converter is plugged into your computer and the correct driver is installed, it will appear as a serial port (eg, COM3 in Windows). You then need to start a terminal emulator on your computer. For Windows, we recommend Tera Term V4.88 which can be downloaded for free from http://tera-term.en.lo4d.com You will need to set its interface speed to 38,400 baud and connect it to the serial port created by the USB-to-serial converter.

Once that's been done, hit the Enter key in the terminal emulator and you should see the Micromite's prompt (">") – Fig.4. You can then enter, edit and run programs from the command prompt using nothing more than the terminal emulator and a USB cable.

Testing

If you don't see the Micromite's prompt, something is definitely wrong and you will need to go through the following troubleshooting procedure. The first step is to measure the current drawn by the Plus BackPack from the 5V power supply. With nothing attached to its I/O pins, this should be 60-80mA. If it is substantially more or less than this, it indicates that something is wrong with either the soldering, the microcontroller or its power supply.

If this is the case, check that +3.3V is present on pins 10, 26, 38, 57 & 35 of IC1 and on various other components – see Fig.1. If this checks out, check that the capacitor connected to pin 56 (Vcap) of IC1 is correctly soldered and is the correct type; it must be a 10µF multi-layer ceramic type. A faulty capacitor will prevent the internal CPU from running and the current drain will be quite low (less than 10mA).

A disconnected pin can also prevent the micro from running, so check the soldering on IC1's pins. It's easy to miss a pin and leave it floating just above its solder pad and without a decent magnifier and bright light, this may not be obvious.

Another cause of low current drain is either not programming the Micromite Plus firmware into the chip or ignoring an error during this operation. Check that the micro has been correctly programmed.

If the current drain is about right, the next step is to attach the Plus BackPack console to your computer or terminal emulator as shown in Fig.3. You could also try using the USB connector as the console.

With the console connected, press the Reset button on the BackPack and you should see the start-up banner as shown in Fig.4. Note that you will not see this banner if you are using the USB console because resetting the Plus BackPack will also reset the USB interface.

If you don't see the start-up banner you should check the console Tx pin for some activity when the Reset button is pressed (this indicates that MMBasic is outputting its start-up banner). This can be done using a logic probe, oscilloscope or, at a pinch, a moving coil multimeter. If you do see some activity, the fault is probably either an incorrect console connection or is in the USB-to-serial converter.

User manuals

The Micromite Plus is quite an advanced device. After all, it is a full computer with a multitude of facilities. As a result, it has two user manuals which together add up to almost 200 pages.

The first manual is called the "Micromite User Manual" and it describes the features that are standard across the whole Micromite range, from the original 28-pin version to the 100-pin Micromite Plus (featured in the September & October 2016 issues).

The extra features of the Micromite Plus are described in the "Micromite Plus Addendum" which covers subjects such as the GUI functions, the SD card interface and other features that are only found in the Micromite Plus.

Both manuals are in PDF format and available for free download from the SILICON CHIP website. Before you build and test the Plus BackPack, it would be worthwhile downloading and looking through them as they provide a lot more information than we can fit into these pages.

Configuring the display

While MMBasic for the Micromite Plus has inbuilt support for 10 different LCD panels, the Plus BackPack is specifically designed to attach to the 2.8-inch diagonal 320x240 display with an ILI9341 controller. For details on how to connect it to other types of display, see the Explore 64 article in the August 2016 issue (pages 70 & 71).

Before configuring the display, you need to turn the backlight on or else it will be very difficult to see anything. Do this using the following command:

```
PWM 2, 1000, 50
```

This sets the brightness to 50% (approximately). You can adjust this value later if required. Assuming you can see that the backlight is now on, proceed to configure the display as follows:

```
OPTION LCDPANEL ILI9341, L,
2, 23, 29
```

To test the display, enter the command:

```
GUI TEST LCDPANEL
```

You should immediately see an animated display of colour circles being rapidly drawn on top of each other. Pressing the space bar on the console's keyboard stops the test. Note that once the display has been configured, you don't need to do it again as the configuration options are stored in the micro's flash memory.

Configuring touch

Once the LCD panel has been configured, you can set up touch sensing using the following command:

```
OPTION TOUCH 1, 3
```

If you have connected a piezo buzzer to one of the unit's pins via a driving transistor and want this buzzer to click when the screen is touched, you can add this pin number onto the end of the command (with a comma separating it from the final digit).

As with other options, this command only needs to be run once and every time the Micromite is restarted, MMBasic will automatically initialise the touch controller. If the touch facility is no longer required, the command `OPTION TOUCH DISABLE` can be used to disable the touch feature and return the I/O pins for general use.

Before the touch facility can be used, it must be calibrated using the `GUI CALIBRATE` command. The calibration process starts with MMBasic displaying a target in the top-left corner of the screen. A blunt, pointed object such as a stylus is then pressed exactly in the centre of the target and held down for at least one second. MMBasic will record this location and then continue the calibration by sequentially displaying the target in the other three corners of the screen.

Following calibration, you can test the touch facility using the `GUI TEST TOUCH` command which will blank the screen and wait for a touch. When the screen is touched with a stylus, a white dot will appear on the display. If the calibration was carried out successfully, this dot will be displayed exactly under the location of the stylus. Pressing the space bar on the console's keyboard exits the test routine.

Configuring an SD card

Now that you've set up the display and touch interfaces, you can configure it to use an SD card. Assuming you have fitted CON7 and the matching header on the TFT module, you can plug a full-size SD card into the socket on the back of the display. Whether or not you have done this, you also have the option of plugging a microSD card into the onboard socket. You can't use both at the same time, though.

We would have liked to provide separate $\overline{CS}$ lines so that both sockets could be used however the Micromite Plus software requires a reboot to change the $\overline{CS}$ pin, making this impractical. So for now, they are connected in parallel and only one can be used at a time.

Before plugging in the card, you need to run the `OPTION SDCARD` command. Note that this must be entered at the command prompt and can not be used in a program. To set up the microSD card socket, use:

```
OPTION SDCARD 21, 22
```

or for the full-size card socket:

```
OPTION SDCARD 21
```

Unfortunately, the TFT module does not break out the card detect pin on the full-size socket, so you can't change the card while the unit is running. After running either command, you will need to restart the Plus BackPack (eg, with reset button S1). After that, MMBasic will automatically initialise the SD card interface each time.

SD card not required

If the SD card is no longer required, the command `OPTION SDCARD DISABLE` can be used which will disable the SD card and return the I/O pins for general use.

To verify the configuration, you can use the command `OPTION LIST` to list all options that have been set, including the configuration of the SD card. As another test, you can pop an SD card into the slot and run the command `FILES`. This will list all the files and directories on the card.

Note that some SD cards can be temperamental and may not work so if you encounter a problem here, try a few SD cards before deciding that you have a fault. For example, some cards (especially high capacity, fast types) may demand more current than the power supply on the Plus BackPack can provide.

USB interface

The USB interface on the Plus BackPack doesn't need configuring. MMBasic monitors the interface and if it detects a host computer, it will automatically configure it for serial emulation over USB.

```
Micromite Plus MMBasic Ver 5.2
Copyright 2011-2016 Geoff Graham

> _
```

Fig.4: this is what you should see in your terminal emulator when you press the reset button on the Micromite Plus LCD BackPack. If you don't see this, the probable reason is that the USB-serial converter is not connected correctly.

A Windows-based host computer (versions before Windows 10) will require the installation of the "Silicon Chip Serial Port Driver", which can be downloaded from the Silicon Chip website. Macintosh and Linux based computers do not need a device driver, as support is built into the operating system.

Windows 10 should not require any drivers to be installed.

Once configured, the USB interface works just like a serial port that's connected to the console. You can start up a terminal emulator such as Tera Term for Windows and tell it to connect to the virtual serial port created by the Micromite Plus.

Anything outputted by the Micromite Plus will be sent out on both the USB interface and the serial console. Similarly, anything received on either of these interfaces will be sent to MMBasic.

One benefit of using the USB interface as the console is that you can disable the serial console. This allows you to use the I/O pins allocated to the serial console for other duties, including use as a fourth serial I/O port. This is described further in the "Micromite Plus Addendum".

Further details

We're publishing further information on how to use the graphics, GUI, SD card and touch functions of the Micromite Plus in two feature articles, one in this month's issue (p58-62) and the second in next month's issue. For further details, refer to the Micromite user manual and addendum, available for free download from the Silicon Chip website, Geoff Graham's website at http://geoffg.net and The Back Shed forum at www.thebackshed.com SC

Using your Raspberry Pi with a smart-phone as a WiFi-controlled switch

Bake your Raspberry Pi with a smartphone and a relay board to open or close your garage door remotely

By Greg Swain & Nicholas Vinen

Ever driven 1km down the road and wondered if you had closed the garage door? Well, by installing a WiFi camera and an app on your smartphone, you can easily check the door's status. Add an RPi computer that's coupled to a garage-door remote and you can also use the phone to open or close the door via a web browser.

WE'VE ALL done it – driven off and then couldn't remember whether or not the garage door had been closed.

Fortunately, a mix of technology makes it easy to remedy that situation. The ingredients are simple: take one IP camera to monitor the garage, add a spare garage remote, mix in your smart-phone and bake them all with a $60 Raspberry Pi (RPi) computer and a 3-way relay board. Once it's all done, you can use the smart-phone (or a PC) to "see" inside your garage and control up to three doors by "pressing" virtual buttons on a web page served up by the RPi

When you press a web-page button, the RPi momentarily sends one of its I/O pins high to pulse a relay on. The relay's NO (normally open) contacts are wired across one of the remote's switches. When they close, this simulates a button press and the garage door opens or closes accordingly. If you have more than one door, it's just a matter of wiring another set of relay contacts acoss the relevant button on the remote.

This set-up can not only remotely close a garage door if you've accidentally left it open but is also useful if you want to give someone access to the garage when you're not at home; eg, to have building materials delivered. It also lets you gain access to the garage if you've accidentally left your garage remote at work or lost it.

In summary then, the RPi has two functions: (1) it serves up the web page with the garage door control buttons; and (2) it briefly pulses the garage-door remote via the relay board. The separate camera app on your phone

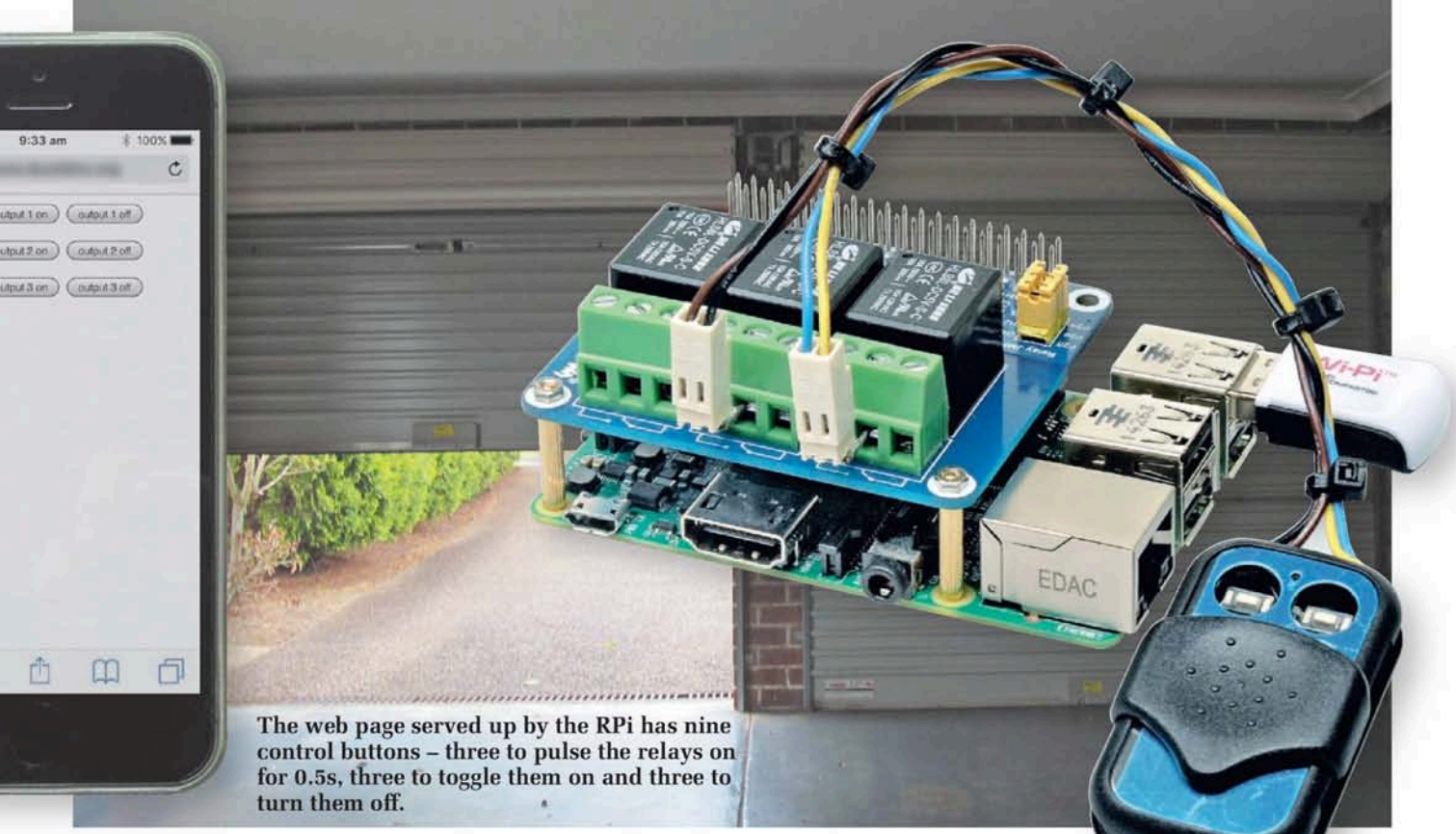

The web page served up by the RPi has nine control buttons – three to pulse the relays on for 0.5s, three to toggle them on and three to turn them off.

simply lets you check the garage door status.

As shown in the photos, the web page served up by the RPi has nine control buttons, three for each relay. In each case, the "pulse output x" button pulses the associated relay on for half a second (0.5s), while the "output on x" and "output off x" buttons respectively toggle the relay on and off.

So as well as briefly pulsing the relays on, you can also toggle them on or off to switch low-voltage devices.

RPi relay board

The Waveshare RPi Relay Board used here supports the Raspberry Pi A+, B+, 2B and 3B models. It has three relays and plugs directly into the RPi's 40-pin I/O header.

In operation, the relays are driven via optocouplers, while their contacts are brought out to 3-way screw terminal blocks. Separate on-board status LEDs are used to indicate whether each relay is on or off.

By default, the relays are controlled by pins 37, 38 & 40 on the RPi's I/O header, as selected by three jumpers. These jumpers can be removed so that other I/O pins on the header can be linked across to control the relays if that suits your particular application.

Supplied with the relay board are two M2.5 x 16mm metal stand-offs (plus screws & nuts). As shown in the photos, these are used to support one side of the relay board (ie, the side opposite the header) when it is plugged into the RPi.

Raspberry Pi set-up

Any RPi computer with a 40-pin GPIO header can be used, including the RPi Model B+, RPi 2 Model B and the recently released RPi 3 Model B. If you're buying a new unit, get the RPi 3 since this comes with onboard WiFi. If you have an earlier model, then you will also need to buy a Wi-Pi WiFi dongle.

An 8-32GB microSD card to accommodate the operating system and a suitable power supply are also required. In addition, you'll also initially need these parts to set the unit up: a USB keyboard and mouse (wireless units can be used), an HDMI cable, a suitable monitor (with HDMI input) and a USB memory card reader.

Once you have all the ingredients, install and configure the Raspbian operating system on the microSD card, as detailed in Steps 1-5 on pages 20-22 of the January 2016 issue (ie, in the RPi Temperature Monitor article). Be sure to use a strong password (Step 5), then get the WiFi working as outlined in Steps 6 & 7.

Steps 8-10 can be omitted but you should install TightVNC by following the instructions on pages 26 & 27. Once you've installed TightVNC (VNC = Virtual Network Computing), you will be able to run your RPi "headless" (ie, without a mouse, keyboard or monitor), with all control now coming via your PC (ie, the RPi's desktop will appear on your PC's monitor).

Next, you need to install the Apache2 Web Server and the **mod_python** module on the RPi. Python is a programming language that's used with Raspbian and the **mod_python** module embeds the Python interpretor with Apache2 so that the two can work together.

First, make sure that your Raspbian OS is completely up to date by running the following commands from a terminal window:

```
sudo apt-get update
sudo apt-get upgrade
sudo reboot
```

That done, install Apache2 and the Python module by following Steps 1-8 on pages 56 & 57 of the February

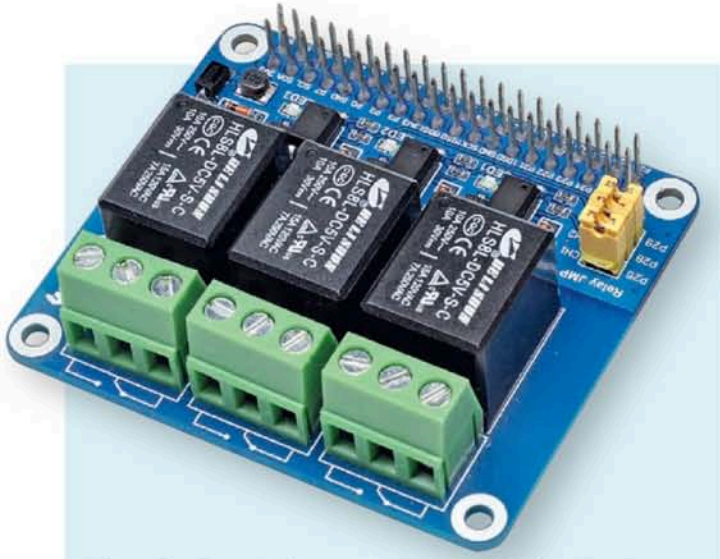

The relay board plugs into the RPi's I/O header. By default, it's controlled by I/O pins 37, 38 & 40.

2016 issue of SILICON CHIP. And because the RPi's web server will be accessible via the internet, it's necessary to set up password access, as follows:

```
sudo apt-get install apache2-utils
sudo a2enmod authn_dbm
sudo htdbm -c -TSDBM /etc/apache2/dbmpasswd <username>
<enter password>
sudo chown www-data /etc/apache2/dbmpasswd.pag
```

Once again, be sure to choose a strong password. It should be a mixture of upper case and lower case letters, numbers and alphanumeric symbols. (Note: the above procedure is exactly the same as Step 10 in the February 2016 issue except that the **-c** and **-TSDBM** switches in line 3 have been transposed).

Next, go to the two Apache2 configuration files (ie, **000-default.conf** and **default-ssl.conf**, in **/etc/apache2/sites-available/**) and add the following lines under the lines you added in Steps 2 & 3:

```
AuthType basic
AuthName "private area"
AuthBasicProvider dbm
AuthDBMType SDBM
AuthDBMUserFile /etc/apache2/dbmpasswd
Require valid-user
```

Then do: **sudo service apache2 restart**

Now, whenever you attempt to browse to the RPi's web server, you will initially be greeted by a dialog box asking you to enter your user-name and password. Note, however, that you must use SSL (set up as in Step 6 of February 2016) and use **https://<yourpublicIPaddress>** to access the site when browsing from the internet (see later), otherwise your password could be intercepted.

Accessing it via the internet

The next step is to configure the RPi so that you can access its web server via the internet. That's done by: (1) assigning a fixed IP address to the RPi (by default, it has a dynamic IP that's assigned by the router); and (2) setting up port forwarding on the router so that port 443 (for https) is forwarded to that fixed IP.

Once that's been done, you should be able to access the RPi's Apache2 web server by entering **https://<yourpublicIPaddress>** in a web browser on your PC or smartphone. When you do so, the log-in dialog should immediately appear and you should be able to enter your details to access Apache2's default web page.

How do you know what your public IP address is? That's easy; just go to **www.whatismyip.com/** and the address will be displayed.

If you don't know how to assign a fixed IP address to the RPi or how to set up port forwarding, page 59 of the February 2016 issue spells it out in detail.

Dynamic DNS (DDNS)

Having to remember your WAN IP is a hassle. Not only that but it can change if the modem/router is restarted. So if you want to be sure that you always have online access to your RPi's web server, the answer is to use a DDNS service.

DDNS stands for "Dynamic Domain Name Server" and it allows you to connect to your home network by using a hostname and domain name. It still makes the connection via your public IP (WAN) address but it no longer matters if this IP address changes and you don't have to know (or remember) what the address is.

The DDNS service will let you choose a hostname when you sign up. You can then browse to your RPi's web server by using this hostname and the DDNS domain name.

If your router supports your preferred DDNS, then you can use the router itself to update the DDNS with your WAN IP. Note, however, that the popular DynDNS service is no longer free, while No-IP now requires you to confirm your hostname every 30 days unless you sign up for the paid version.

Duck DNS is a great free alternative and it only takes a few minutes to sign up. It probably won't be supported by your router but there's an easy answer to that problem – use the RPi itself to run a script to periodically update the Duck DNS server with your WAN (public) IP address.

It's all quite easy to do and is set out in detail on page 60 of the February 2016 issue.

Having completed the set-up, check that you can browse to your RPi's default web page using the hostname. For example, if you're using Duck DNS, enter **http://yourhostname.duckdns.org** into your browser (replace "yourhostname" with your chosen name).

Web page set-up

The next step is to get Apache2 working with the Python 3 program that displays our web page with the relay control buttons. The program itself is called **index.py** and you'll find it on the SILICON CHIP website zipped up inside **RpiWiFiSwitchV1.zip**.

You have to download this file, unzip it and move it into the RPi's **/var/www/html** folder.

Begin by browsing to **http://www.siliconchip.com.au** using the RPi's web browser. Now click **Shop**, select **Software** from the drop-list and left-click the **RPiWiFiSwitch.zip** file. The file will download into the **/pi/Downloads** folder after which you navigate to this folder, then right click the zip file to extract **index.py**.

Before moving **index.py**, it's a good idea to rename

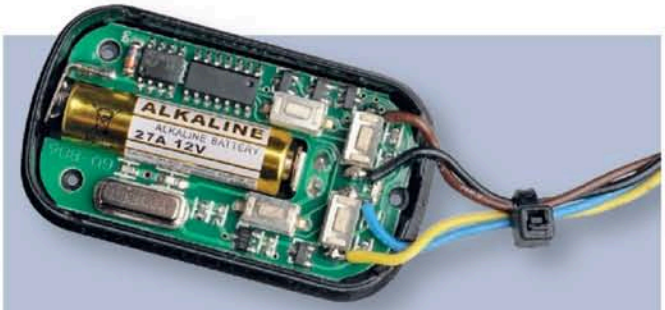

The NO relay contacts are wired across the buttons on the garage remote as shown here. Remove the battery before soldering the wires.

any existing **index.py** file in **/var/www/html**. That's done by issuing the following commands:

```
cd /var/www/html
sudo mv index.py index.py.old
```

The new index.py file can now be moved into **/var/www/html** as follows:

```
sudo mv /pi/Downloads/index.py /var/www/html
```

You now need to give Apache2 permission to access the RPI's GPIO pins, as follows:

```
sudo adduser www-data gpio
```

That's it! – it should now work. Using a computer on the local network (or the RPi itself), browse to (for example) **https://yourhostname.duckdns.org** (or use your public IP address). Enter your user-name and password to log-in, then check that the relays on the RPi Relay Board respond when the various control buttons are clicked.

If it works, test it out on your smart-phone. **Note that you will have to zoom in on the buttons to make sure you touch the correct one.**

Retaining access to an existing web page

What if you want to keep an existing **index.py** web page? For example, you may have previously set up your RPi's web server so that you can monitor temperatures (see March 2016 issue) and you may want to maintain access to these measurements.

In that case, it's just a matter of renaming the newly unzipped **index.py** file for the garage doors before moving it. For example, you could rename the file to **garage.py** and then move this to **/var/www/html**. The web page for your temperature measurements can then be accessed as normal, while the garage door control buttons are accessed by browsing to **https://yourhostname.duckdns.org/garage.py**

Wiring the remote

This job couldn't be easier; just wire a pair of leads across each button you wish to control and connect them to the NO & COM contacts of the corresponding relay.

You will need to remove the remote's PCB from its case and use a soldering iron with a fine tip to connect the wires. It's a good idea to remove the battery before soldering, to prevent the remote from being damaged during this process.

Once the leads have been attached, cut a couple of notches in one end of the case for the leads to exit and refit the PCB. If that's not practical, install the PCB inside a separate case (perhaps with the RPi itself).

If you don't have a spare remote, you can buy one from a garage door specialist. You can buy these quite cheaply on eBay but if you take that approach, make sure it's the right type to work with your garage door controller as many remotes look similar but operate differently. Another possibility is to simply connect the relay contacts across the manually-operated door control switch that's mounted on the garage wall or even directly to the open/close terminals on the back of the motor control unit itself.

Take security seriously

Security is a serious issue here. You really don't want someone to hack their way in and open or close your garage doors at will!

So how secure is it? The answer is that your garage doors are about as secure as the password you chose for the RPi's web server. Similarly, your camera (see below) will be about as secure as the strength of its password.

Fortunately, there's a fairly simple way to lock it down even further, to keep the bad guys out of your RPi's web server. The answer is to install an intrusion software utility called "Fail2Ban". This utility monitors the number of log-in attempts and if they exceed a preset number (say five), it bans the offending source IP address from making any further attempts for a set period (or even permanently).

Fail2Ban is easy to install and configure. The accom-

You'll Need These Parts

Core parts

1 Raspberry Pi 3 Model B or Raspberry Pi 2 Model B computer module

1 Wi-Pi WiFi dongle (not necessary if you have a RPi 3 Model B, as these have onboard WiFi)

1 8-32GB microSD card (class 6 or class 10) . . . or purchase a pre-programmed microSD card from element14 or Wiltronics

1 5V power supply with USB to micro-USB cable (note: must be rated at 2.5A for RPi 3 Model B)

1 spare garage remote

1 Waveshare RPi Relay Board (order from AliExpress or Amazon)

The parts required during set-up

1 USB keyboard and mouse (wireless units should work, provided they're paired)

1 monitor with HDMI or DVI input

1 HDMI-HDMI or HDMI-DVI cable to suit monitor

1 microSD card reader

Raspberry Pi starter packs

Wiltronics has a number of Raspberry Pi starter packs – see www.wiltronics.com.au

It's a good idea to install a panning camera on the back wall of the garage so that you can check that the garage is empty before closing the door.

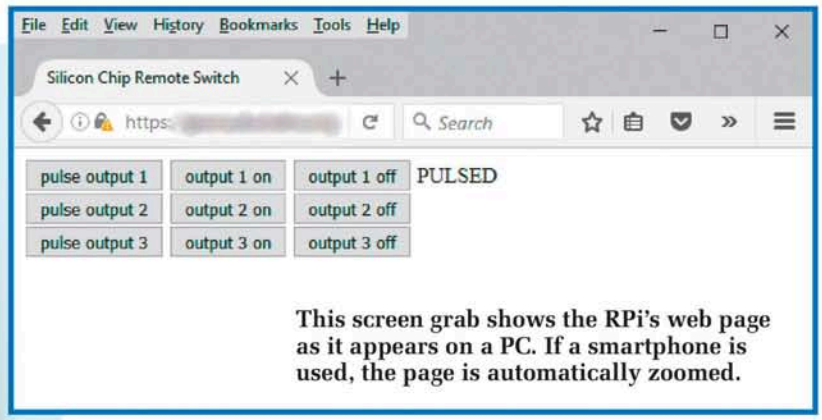

This screen grab shows the RPi's web page as it appears on a PC. If a smartphone is used, the page is automatically zoomed.

panying panel titled "Keeping The Bad Guys Out" (reproduced from February 2016) has the details.

You could also install a separate firewall on the RPi but since it normally sits behind your router's firewall, this won't normally be necessary. Once again, the accompanying panel has the details.

Setting up an IP camera

OK, now that the RPi's web server and relay board are working correctly, the next step is to set up an IP camera to monitor the garage doors. If you don't already have a suitable camera, the Jaycar TechView QC3834 and Altronics EasyN S9012 are good candidates.

Setting up the camera to connect to your WiFi network is straightforward. It's usually just a matter of first plugging it into your router via a Cat5 cable, figuring out its IP address, then logging into the camera's web interface (via a browser) and entering your WiFi network's SSID (ie, the network name) and password.

How do you figure out the camera's IP address in order to access its web interface? Well, assuming your router has DHCP enabled, it will automatically allocate an IP address to the camera when it is plugged in, just as it does for other devices on the network. From there, you can quickly figure out the allocated IP address by trial and error.

For example, if the router itself has an IP address of 192.168.0.1, then the camera might be on 192.168.0.2 or 192.168.0.3 (or higher), depending on which addresses have already been allocated to devices such as PCs, smart-phones and smart TVs, etc.

To test an IP address, simply enter it along with the camera's port number into the address bar of your web browser. The default port number (usually 80) will either be on a label on the camera's body or listed in the supplied instructions. It must be separated from the IP address by a colon.

For example, let's say that the camera's port number is 80 and you want to test an IP address of 192.168.0.7. It's just a matter of entering 192.168.0.7:80 into your browser and pressing Enter. If it's the correct IP, the camera's web interface will immediately appear and you can log into it using the default user name (usually "admin") and password (usually "admin" or left blank).

Another way of determining the IP address is to log into your router's web interface and check the DHCP client table or similar. In addition, some cameras such as the TechView QC3834 are supplied with a software utility called "IP Camera Tool". Installing and running this on your PC will then list the camera's IP and its port number. Double-clicking this will then bring up its web interface.

Before actually entering the WiFi set-up details, be sure to change the camera's default user name and password. A strong password is an absolute must if you don't want others spying on you. You can also change the default port number if you wish.

Disconnect the LAN cable and restart the camera after entering all the details. You will then be able to access the camera and view the video via the WiFi network.

Viewing via the internet

In most cases, an IP camera will be supplied with a unique DDNS hostname so that you can view it over the

Exercise Caution

Naturally, you should exercise a great deal of caution if you intend to close a garage door from a remote location. After all, you don't want to close it on a family member who is out the front working in the garden, or collecting the mail, or who has just come home and is driving into the garage.

To avoid problems like this, always check where each family member is before closing the door. It's also a good idea to restrict usage to one smartphone only, to avoid potential conflicts.

Setting up a panning camera so that you can monitor the whole inside garage area is also a good idea (eg, mount the camera high up on the back wall). That way, you can pan to ensure that your neighbour's dog or a curious cat hasn't wondered inside while the door was opened. Both the Jaycar TechView QC3834 and Altronics EasyN S9012 IP cameras can be panned and so are well suited to this role.

Keeping The Bad Guys Out

Opening port 443 on the router (to enable internet access to the web-server) is a potential security problem. That's why it's important to choose a strong password for the Apache2 authentication log-in.

Fail2Ban

Despite this, the web-server's log-in prompt will soon attract brute force attempts to gain access by people running password dictionaries. There's an easy way to defeat such attacks, though: limit the number of log-in attempts by using an intrusion detection software utility called "Fail2Ban".

Fail2Ban works by monitoring the logs generated by various services (such as Apache2). If there are too many failed log-in attempts, it then temporarily (or permanently) bans the offending IP from making further attempts. For example, it can be configured to allow three log-in attempts and if all are unsuccessful, ban the offending IP for 20 minutes, depending on the settings in the configuration file.

In practice, Fail2Ban sets up a few simple iptable firewall rules (iptables is the utility used to configure Linux firewalls). It then automatically alters these rules after the preset number of failed log-in attempts. By default, it monitors SSH (port 22) only but it's just a matter of altering its configuration file to include other protocols such as HTTP (port 80) and HTTPS (port 443), as used by Apache2.

An excellent guide on configuring Fail2Ban can be found at www.digitalocean.com/community/tutorials/how-to-protect-an-apache-server-with-fail2ban-on-ubuntu-14-04 It's just a matter of following this to configure Fail2Ban so that, as well as SSH, it also protects the RPi's Apache2 server (HTTP & HTTPS).

Important points

Note that you have to copy the default configuration file to "***/etc/fail2ban/jail.local***". You then edit this new file (it overrides the original configuration file) to set the "bantime", the maximum number of tries ("maxretry") and the "findtime" (the time period over which the retries are counted). The default bantime is 600 seconds but you can increase this (eg, to 1800 seconds) or enter a negative number to ban the offending IP forever.

It's then important to scroll down to the [apache] jail section and change to line **enabled = false** to **enabled = true**. Fail2Ban will then cover both http and https.

Installing a firewall

Unless you've opened up myriad ports on your router, a separate firewall on the RPi isn't really necessary. However, if you're a "belts'n'braces" type, try Uncomplicated Firewall (UFW) which is an easy-to-use iptables configuration utility.

The following website has the basics on UFW's installation and usage: www.digitalocean.com/community/tutorials/how-to-set-up-a-firewall-with-ufw-on-ubuntu-14-04

Of course, all bets are off if you decide to add the RPi to your router's DMZ (demilitarised zone). Placing it in the DMZ means that it cannot contact other devices on your internal LAN in the event that it's compromised (it's added to the DMZ by logging into your router and going to the DMZ set-up page).

The downside is that all ports on the router will then be forwarded to the RPi, so it's wide open. As a result, a firewall is then an absolute must.

In practice, you would set up the firewall to initially block all incoming ports. You then create rules to open port 443 (for https) and any other ports required, eg, for SSH (secure shell) long-ins.

internet. It's just a matter of setting the camera up for WiFi access as described above, then entering the address shown on a label on the bottom of the camera into your browser, followed by a colon, then the port number.

Alternatively, some cameras carry a Q-code on the base label and scanning this using a smartphone (with the necessary app installed) will take you straight to that address (you may have to manually enter the port number if you've changed it).

If it works, then your router has inbuilt support for automatic port forwarding via UPnP (Universal Plug and Play) and that's the end of the story. Of course, your IP camera must also support UPnP but just about all do.

If it doesn't work, check that UPnP hasn't been disabled in the router. That said, not all routers support automatic port forwarding, even if they do have UPnP. In that case, you will have to assign a static IP address to your camera and manually set up the port forwarding in your router. A detailed explanation on how to do this is in "Setting Up An IP Camera For WiFi & Internet Access" in the March 2015 issue of SILICON CHIP.

Once its working, install the relevant camera app on your smartphone and enter the connection details. These details include the DDNS hostname, the port number, your user name (ie, for the camera) and the password. You will then be able to fire up the app and view the video inside your garage.

Controlling Other Devices

As well as controlling garage doors, you could also use the RPi to control other devices. For example, it could be used to pulse the remote of a remote-controlled mains power board. However, exercise caution as to the circumstances under which you remotely turn mains-powered devices on in this manner. Turning on an unattended device such as a heater or a lamp could lead to a fire, for example (and in any case, a heater should not be plugged into a power board).

Because the relay outputs can be toggled, you can directly switch low-voltage devices (eg, LED lamps) on or off (up to about 24V DC or 15VAC). **However, despite the fact that the relays are rated at 250VAC, you should keep mains voltages well away from your RPi set-up.**

Running mains wiring to the RPi's relay board would be much too dangerous. If you do wish to switch mains voltages, use the RPi to control the remote of a remote-controlled mains switch or use a commercial WiFi switch, eg, from Bunnings – see https://www.bunnings.com.au/belkin-wemo-switch_p4420346

In the unlikely event that the camera's manufacturer doesn't offer a DDNS service, use Duck DNS as explained earlier. SC

SILICON CHIP .com.au/shop ONLINESHOP

Looking for a specialised component to build that latest and greatest *Silicon Chip* project? Maybe it's the PCB you're after? Or a pre-programmed micro? Or some other hard-to-get "bit"? The chances are they are available direct from the *Silicon Chip* ONLINESHOP.

As a service to readers, *Silicon Chip* has established the ONLINESHOP. No, we're not going into opposition with your normal suppliers – this is a direct response to requests from readers who have found difficulty in obtaining specialised parts such as PCBs & micros.

- PCBs are normally IN STOCK and ready for despatch when that month's magazine goes on sale (you don't have to wait for them to be made!).
- Even if stock runs out (eg, for high demand), in most cases there will be no longer than a two-week wait.
- One low p&p charge: $10 per order, regardless of how many boards or micros you order! (Australia only; overseas clients – email us for a postage quote).
- Our PCBs are beautifully made, very high quality fibreglass boards with pre-tinned tracks, silk screen overlays and where applicable, solder masks.
- Best of all, those boards with fancy cut-outs or edges are already cut out to the *SILICON CHIP* specifications – no messy blade work required!

HERE'S HOW TO ORDER:

VISA MasterCard PayPal

All prices are in AUSTRALIAN DOLLARS ($AU)

✔ **Via the INTERNET** (24 hours, 7 days): Log on to our secure website – siliconchip.com.au, click on "SHOP" and follow the links

✔ **Via EMAIL** (24 hours, 7 days): email silicon@siliconchip.com.au – Clearly tell us what you want and include your contact and credit card details

✔ **Via MAIL** (24 hours, 7 days): PO Box 139, Collaroy NSW 2097. Clearly tell us what you want and include your contact and credit card details

✔ **Via PHONE** (9am-5pm EADST, Mon-Fri): Call (02) 9939 3295 (INT 612 9939 3295) – have your order ready, including contact and credit card details!

YES! You can also order or renew your SILICON CHIP subscription via any of these methods as well!

PRE-PROGRAMMED MICROS

Price for any of these micros is just $15.00 each + $10 p&p per order#

As a service to readers, *Silicon Chip OnLineShop* stocks microcontrollers and microprocessors *used in new projects* (from 2012 on) and some selected older projects – pre-programmed and ready to fly!

Some micros from copyrighted and/or contributed projects may not be available.

PIC12F675-I/P	UHF Remote Switch (Jan09), Ultrasonic Cleaner (Aug10), Ultrasonic Anti-fouling (Sep10), Cricket/Frog (Jun12) Do Not Disturb (May13) IR-to-UHF Converter (Jul13), UHF-to-IR Converter (Jul13) PC Birdies *2 chips – $15 pair* (Aug13). Driveway Monitor Receiver (July15) Hotel Safe Alarm (Jun16)
PIC16F1507-I/P	Wideband Oxygen Sensor (Jun-Jul12)
PIC16F88-E/P	Hi Energy Ignition (Nov/Dec12), Speedo Corrector (Sept13), Auto Headlight Controller (Oct13) 10A 230V Motor Speed Controller (Feb14)
PIC16F88-I/P	Projector Speed (Apr11), Vox (Jun11), Ultrasonic Water Tank Level (Sep11), Quizzical (Oct11) Ultra LD Preamp (Nov11), 10-Channel Remote Control Receiver (Jun13), Revised 10-Channel Remote Control Receiver (Jul13), Nicad/NiMH Burp Charger (Mar14) Remote Mains Timer (Nov14), Driveway Monitor Transmitter (July15) Fingerprint Scanner (Nov15) MPPT Lighting Charge Controller (Feb16) 50/60Hz Turntable Driver (May16) Cyclic Pump Timer (Sep16) **50A Battery Charger Controller (Nov16)**
PIC16LF88-I/P	Garbage Reminder (Jan13), Bellbird (Dec13)
PIC16LF88-I/SO	LED Ladybird (Apr13)
PIC16LF1709-I/SO	Battery Cell Balancer (Mar16)
PIC16F877A-I/P	6-Digit GPS Clock (May-Jun09), Lab Digital Pot (Jul10) Semtest (Feb-May12)
PIC18F2550-I/SP	Batt Capacity Meter (Jun09), Intelligent Fan Controller (Jul10)
PIC18F4550-I/P	GPS Car Computer (Jan10), GPS Boat Computer (Oct10)
PIC18F27J53-I/SP	USB Data Logger (Dec10-Feb11)
PIC18LF14K22	Digital Spirit Level (Aug11), G-Force Meter (Nov11)
PIC32MX795F512H-80I/PT	Maximite (Mar11), miniMaximite (Nov11), Colour Maximite (Sept/Oct12), Touchscreen Audio Recorder (Jun/Jul 14)
PIC32MX170F256B-50I/SP	Micromite Mk2 (Jan15) – *also includes* ***FREE*** *47µF tantalum capacitor* Micromite LCD Backpack [either version] (Feb16) GPS Boat Computer (Apr16) Micromite Super Clock (Jul16)
PIC32MX170F256B-I/SP	Low Frequency Distortion Analyser (Apr15)
PIC32MX170F256D-501P/T	44-pin Micromite Mk2 (Now with Mk2 Firmware at no extra cost)
PIC32MX250F128B-I/SP	GPS Tracker (Nov13) Micromite ASCII Video Terminal (Jul14)
PIC32MX470F512H-I/PT	Stereo Audio Delay/DSP (Nov13), Stereo Echo/Reverb (Feb 14), Digital Effects Unit (Oct14)
PIC32MX470F512H-120/PT	Micromite PLUS Explore 64 (Aug 16) **Micromite Plus LCD BackPack (Nov16)**
PIC32MX470F512L-120/PT	Micromite PLUS Explore 100 (Sep-Oct16)
dsPIC33FJ128GP802-I/SP	Digital Audio Signal Generator (Mar-May10), Digital Lighting Controller (Oct-Dec10), SportSync (May11), Digital Audio Delay (Dec11) Level (Sep11) Quizzical (Oct11), Ultra-LD Preamp (Nov11), LED Musicolor (Nov12)
dsPIC33FJ64MC802-E/P	Induction Motor Speed Controller (revised) (Aug13)
dsPIC33FJ128GP306-I/PT	CLASSiC DAC (Feb-May 13)
ATTiny861	VVA Thermometer/Thermostat (Mar10), Rudder Position Indicator (Jul11)
ATTiny2313	Remote-Controlled Timer (Aug10)

When ordering, be sure to nominate BOTH the micro required AND the project for which it must be programmed.

SPECIALISED COMPONENTS, HARD-TO-GET BITS, ETC

P&P – $10 Per order#

NEW THIS MONTH:

PASSIVE LINE TO PHONO INPUT CONVERTER - ALL SMD PARTS *(NOV16)* $5.00

MICROMITE PLUS LCD BACKPACK **COMPLETE KIT** *(NOV16)* $70.00

(Includes PCB, micro, 2.8-in touchscreen, all SMD parts & lid)

MICROMITE PLUS EXPLORE 100 **COMPLETE KIT (no LCD panel)** *(SEP16)* **$69.90**
(includes PCB, programmed micro and the hard-to-get bits including female headers, USB and microSD sockets, crystal, etc but does not include the LCD panel)

DS3231-BASED REAL TIME CLOCK MODULE
with two 10mm M2 spacers & four 6mm M2 Nylon screws *(Jul16)* **$5.00**

100dB STEREO AUDIO LEVEL/VU METER
All SMD parts except programmed micro and LEDs (both available separately) *(Jun16)* **$20.00**

RASPBERRY PI TEMPERATURE SENSOR EXPANSION
Two BSO150N03 dual N-channel Mosfets plus 4.7kΩ SMD resistor: *(May16)* **$5.00**

MICROWAVE LEAKAGE DETECTOR - all SMD parts: *(Apr16)* **$10.00**

BOAT COMPUTER - **(REQUIRES MICROMITE LCD BACKPACK – $65.00 [see below])** *(Apr16)*

BOAT COMPUTER - VK2828U7G5LF TTL GPS/GLONASS/GALILEO module with antenna & cable: **$25.00**

BOAT COMPUTER - VK16E TTL GPS module with antenna & cable: *(Apr16)* **$20.00**

ULTRASONIC PARKING ASSISTANT (REQUIRES MICROMITE LCD BACKPACK – $65.00 [see below]
Ultrasonic Range Sensor **PLUS** clear lid with cutout to suit UB5 Jiffy Box *(Mar 16)* **$7.50**

BATTERY CELL BALANCER
ALL SMD PARTS, including programmed micro *(Mar 16)* **$50.00**

MICROMITE LCD BACKPACK *** COMPLETE KIT ******* *(Feb 16)* **$65.00**
includes PCB, micro and 2.8-inch touchscreen **AND NOW INCLUDES LID** *(specify clear or black lid)*

VALVE STEREO PREAMPLIFIER - *(Jan 16)* **$30.00**
100µH SMD inductor, 3x low-profile 400V capacitors & 0.33Ω resistor

MINI USB SWITCHMODE REGULATOR Mk II all SMD components *(Sept 15)* **$15.00**

ARDUINO-BASED ECG SHIELD - all SMD components *(Oct 15)* **$25.00**

ULTRA LD Mk 4 - plastic sewing machine bobbin for L2 – pack 2 *(Oct 15)* **$2.00**

VOLTAGE/CURRENT/RESISTANCE REFERENCE - all SMD components# *(Aug 15)* **$12.50**
includes precision resistor. Specify either 1.8V or 2.5V

MINI USB SWITCHMODE REGULATOR all SMD components *(July 15)* **$10.00**

BAD VIBES INFRASOUND SNOOPER - TDA1543 16-bit Stereo DAC IC *(Jun 15)* **$2.50**

BALANCED INPUT ATTENUATOR - all SMD components inc.12 NE5532D ICs, 8 SMD diodes, SMD caps, polypropylene caps plus all 0.1% resistors (SMD & through-hole) *(May 15)* **$65.00**

APPLIANCE INSULATION TESTER - 600V logic-level Mosfet. 5 x HV resistors: *(Apr15)* **$10.00**

ISOLATED HIGH VOLTAGE PROBE - Hard-to-get parts pack: all ICs, 1N5711 diodes, LED, high-voltage capacitors & resistors: *(Jan15)* **$40.00**

CDI – Hard-to-get parts pack: Transformer components (excluding wire), all ICs, Mosfets, UF4007 diodes, 1µF X2 capacitor: *(Dec 14)* **$40.00**

CURRAWONG AMPLIFIER Hard-to-get parts pack: *(Dec 14)* **$50.00**
LM1084IT-ADJ, KCS5603D, 3 x STX0560, 5 x blue 3mm LEDs, 5 x 39µF 400V low profile capacitors

ONE-CHIP AMPLIFIER - All SMD parts *(Nov 14)* **$15.00**

DIGITAL EFFECTS UNIT WM8371 DAC IC & SMD Capacitors *[Same components also suit Stereo Echo & Reverb, Feb14 & Dual Channel Audio Delay Nov 14]* *(Oct14)* **$25.00**

AD8038ARZ Video Amplifier ICs For Active Differential Probe (Pack of 3 SMD) *(Sept 14)* **$12.50**

44-PIN MICROMITE Complete kit inc PCB, micro etc *(Aug14)* **$35.00**

MAINS FAN SPEED CONTROLLER - AOT11N60L 600V Mosfet *(May14)* **$5.00**

THESE ARE ONLY THE MOST RECENT MICROS AND SPECIALISED COMPONENTS. FOR THE FULL LIST, SEE www.siliconchip.com.au/shop

*All items subect to availability. Prices valid for month of magazine issue only. All prices in Australian dollars and included GST where applicable. **# P&P prices are within Australia. O'seas? Please email for a quote**

PRINTED CIRCUIT BOARDS

NOTE: The listings below are for the PCB only – *not a full kit*. If you want a kit, contact the kit suppliers advertising in this issue. For more unusual projects where kits are not available, some have specialised components available – see the list opposite.

NOTE: Not all PCBs are shown here due to space limits but the SILICON CHIP ONLINESHOP has boards going back to 2001 and beyond. For a complete list of available PCBs, back issues, etc, go to *siliconchip.com.au/shop* Prices are PCBs only, NOT COMPLETE KITS!

PRINTED CIRCUIT BOARD TO SUIT PROJECT:	PUBLISHED:	PCB CODE:	Price:
RESISTANCE DECADE BOX PANEL/LID	APR 2012	04104122	$20.00
1.5kW INDUCTION MOTOR SPEED CONT. (New V2 PCB)	APR (DEC) 2012	10105122	$35.00
HIGH TEMPERATURE THERMOMETER MAIN PCB	MAY 2012	21105121	$30.00
HIGH TEMPERATURE THERMOMETER Front & Rear Panels	MAY 2012	21105122/3	$20 per set
MIX-IT! 4 CHANNEL MIXER	JUNE 2012	01106121	$20.00
PIC/AVR PROGRAMMING ADAPTOR BOARD	JUNE 2012	24105121	$30.00
CRAZY CRICKET/FREAKY FROG	JUNE 2012	08109121	$10.00
CAPACITANCE DECADE BOX	JULY 2012	04106121	$20.00
CAPACITANCE DECADE BOX PANEL/LID	JULY 2012	04106122	$20.00
WIDEBAND OXYGEN CONTROLLER MK2	JULY 2012	05106121	$20.00
WIDEBAND OXYGEN CONTROLLER MK2 DISPLAY BOARD	JULY 2012	05106122	$10.00
SOFT STARTER FOR POWER TOOLS	JULY 2012	10107121	$10.00
DRIVEWAY SENTRY MK2	AUG 2012	03107121	$20.00
MAINS TIMER	AUG 2012	10108121	$10.00
CURRENT ADAPTOR FOR SCOPES AND DMMS	AUG 2012	04108121	$20.00
USB VIRTUAL INSTRUMENT INTERFACE	SEPT 2012	24109121	$30.00
USB VIRTUAL INSTRUMENT INT. FRONT PANEL	SEPT 2012	24109122	$30.00
BARKING DOG BLASTER	SEPT 2012	25108121	$20.00
COLOUR MAXIMITE	SEPT 2012	07109121	$20.00
SOUND EFFECTS GENERATOR	SEPT 2012	09109121	$10.00
NICK-OFF PROXIMITY ALARM	OCT 2012	03110121	$5.00
DCC REVERSE LOOP CONTROLLER	OCT 2012	09110121	$10.00
LED MUSICOLOUR	NOV 2012	16110121	$25.00
LED MUSICOLOUR Front & Rear Panels	NOV 2012	16110121	$20 per set
CLASSIC-D CLASS D AMPLIFIER MODULE	NOV 2012	01108121	$30.00
CLASSIC-D 2 CHANNEL SPEAKER PROTECTOR	NOV 2012	01108122	$10.00
HIGH ENERGY ELECTRONIC IGNITION SYSTEM	DEC 2012	05110121	$10.00
1.5kW INDUCTION MOTOR SPEED CONTROLLER (NEW V2 PCB)	DEC 2012	10105122	$35.00
THE CHAMPION PREAMP and 7W AUDIO AMP (one PCB)	JAN 2013	01109121/2	$10.00
GARBAGE/RECYCLING BIN REMINDER	JAN 2013	19111121	$10.00
2.5GHz DIGITAL FREQUENCY METER – MAIN BOARD	JAN 2013	04111121	$35.00
2.5GHz DIGITAL FREQUENCY METER – DISPLAY BOARD	JAN 2013	04111122	$15.00
2.5GHz DIGITAL FREQUENCY METER – FRONT PANEL	JAN 2013	04111123	$45.00
SEISMOGRAPH MK2	FEB 2013	21102131	$20.00
MOBILE PHONE RING EXTENDER	FEB 2013	12110121	$10.00
GPS 1PPS TIMEBASE	FEB 2013	04103131	$10.00
LED TORCH DRIVER	MAR 2013	16102131	$5.00
CLASSiC DAC MAIN PCB	APR 2013	01102131	$40.00
CLASSiC DAC FRONT & REAR PANEL PCBs	APR 2013	01102132/3	$30.00
GPS USB TIMEBASE	APR 2013	04104131	$15.00
LED LADYBIRD	APR 2013	08103131	$5.00
CLASSiC-D 12V to ±35V DC/DC CONVERTER	MAY 2013	11104131	$15.00
DO NOT DISTURB	MAY 2013	12104131	$10.00
LF/HF UP-CONVERTER	JUN 2013	07106131	$10.00
10-CHANNEL REMOTE CONTROL RECEIVER	JUN 2013	15106131	$15.00
IR-TO-455MHZ UHF TRANSCEIVER	JUN 2013	15106132	$7.50
"LUMP IN COAX" PORTABLE MIXER	JUN 2013	01106131	$15.00
L'IL PULSER MKII TRAIN CONTROLLER	JULY 2013	09107131	$15.00
L'IL PULSER MKII FRONT & REAR PANELS	JULY 2013	09107132/3	$20.00/set
REVISED 10 CHANNEL REMOTE CONTROL RECEIVER	JULY 2013	15106133	$15.00
INFRARED TO UHF CONVERTER	JULY 2013	15107131	$5.00
UHF TO INFRARED CONVERTER	JULY 2013	15107132	$10.00
IPOD CHARGER	AUG 2013	14108131	$5.00
PC BIRDIES	AUG 2013	08104131	$10.00
RF DETECTOR PROBE FOR DMMs	AUG 2013	04107131	$10.00
BATTERY LIFESAVER	SEPT 2013	11108131	$5.00
SPEEDO CORRECTOR	SEPT 2013	05109131	$10.00
SiDRADIO (INTEGRATED SDR) Main PCB	OCT 2013	06109131	$35.00
SiDRADIO (INTEGRATED SDR) Front & Rear Panels	OCT 2013	06109132/3	$25.00/pr
TINY TIM AMPLIFIER (same PCB as Headphone Amp [Sept11])	OCT 2013	01309111	$20.00
AUTO CAR HEADLIGHT CONTROLLER	OCT 2013	03111131	$10.00
GPS TRACKER	NOV 2013	05112131	$15.00
STEREO AUDIO DELAY/DSP	NOV 2013	01110131	$15.00
BELLBIRD	DEC 2013	08112131	$10.00
PORTAPAL-D MAIN BOARDS	DEC 2013	01111131-3	$35.00/set
(for CLASSiC-D Amp board and CLASSiC-D DC/DC Converter board refer above [Nov 2012/May 2013])			
LED Party Strobe (also suits Hot Wire Cutter [Dec 2010])	JAN 2014	16101141	$7.50
Bass Extender Mk2	JAN 2014	01112131	$15.00
Li'l Pulser Mk2 Revised	JAN 2014	09107134	$15.00
10A 230VAC MOTOR SPEED CONTROLLER	FEB 2014	10102141	$12.50
NICAD/NIMH BURP CHARGER	MAR 2014	14103141	$15.00
RUBIDIUM FREQ. STANDARD BREAKOUT BOARD	APR 2014	04105141	$10.00
USB/RS232C ADAPTOR	APR 2014	07103141	$5.00
MAINS FAN SPEED CONTROLLER	MAY 2014	10104141	$10.00
RGB LED STRIP DRIVER	MAY 2014	16105141	$10.00
HYBRID BENCH SUPPLY	MAY 2014	18104141	$20.00
2-WAY PASSIVE LOUDSPEAKER CROSSOVER	JUN 2014	01205141	$20.00
TOUCHSCREEN AUDIO RECORDER	JUL 2014	01105141	$12.50
THRESHOLD VOLTAGE SWITCH	JUL 2014	99106141	$10.00
MICROMITE ASCII VIDEO TERMINAL	JUL 2014	24107141	$7.50
FREQUENCY COUNTER ADD-ON	JUL 2014	04105141a/b	$15.00
TEMPMASTER MK3	AUG 2014	21108141	$15.00

PRINTED CIRCUIT BOARD TO SUIT PROJECT:	PUBLISHED:	PCB CODE:	Price:
44-PIN MICROMITE	AUG 2014	24108141	$5.00
OPTO-THEREMIN MAIN BOARD	SEP 2014	23108141	$15.00
OPTO-THEREMIN PROXIMITY SENSOR BOARD	SEP 2014	23108142	$5.00
ACTIVE DIFFERENTIAL PROBE BOARDS	SEP 2014	04107141/2	$10/SET
MINI-D AMPLIFIER	SEP 2014	01110141	$5.00
COURTESY LIGHT DELAY	OCT 2014	05109141	$7.50
DIRECT INJECTION (D-I) BOX	OCT 2014	23109141	$5.00
DIGITAL EFFECTS UNIT	OCT 2014	01110131	$15.00
DUAL PHANTOM POWER SUPPLY	NOV 2014	18112141	$10.00
REMOTE MAINS TIMER	NOV 2014	19112141	$10.00
REMOTE MAINS TIMER PANEL/LID (BLUE)	NOV 2014	19112142	$15.00
ONE-CHIP AMPLIFIER	NOV 2014	01109141	$5.00
TDR DONGLE	DEC 2014	04112141	$5.00
MULTISPARK CDI FOR PERFORMANCE VEHICLES	DEC 2014	05112141	$10.00
CURRAWONG STEREO VALVE AMPLIFIER MAIN BOARD	DEC 2014	01111141	$50.00
CURRAWONG REMOTE CONTROL BOARD	DEC 2014	01111144	$5.00
CURRAWONG FRONT & REAR PANELS	DEC 2014	01111142/3	$30/set
CURRAWONG CLEAR ACRYLIC COVER	JAN 2015	-	$25.00
ISOLATED HIGH VOLTAGE PROBE	JAN 2015	04108141	$10.00
SPARK ENERGY METER MAIN BOARD	FEB/MAR 2015	05101151	$10.00
SPARK ENERGY ZENER BOARD	FEB/MAR 2015	05101152	$10.00
SPARK ENERGY METER CALIBRATOR BOARD	FEB/MAR 2015	05101153	$5.00
APPLIANCE INSULATION TESTER	APR 2015	04103151	$10.00
APPLIANCE INSULATION TESTER FRONT PANEL	APR 2015	04103152	$10.00
LOW-FREQUENCY DISTORTION ANALYSER	APR 2015	04104151	$5.00
APPLIANCE EARTH LEAKAGE TESTER PCBs (2)	MAY 2015	04203151/2	$15.00
APPLIANCE EARTH LEAKAGE TESTER LID/PANEL	MAY 2015	04203153	$15.00
BALANCED INPUT ATTENUATOR MAIN PCB	MAY 2015	04105151	$15.00
BALANCED INPUT ATTENUATOR FRONT & REAR PANELS	MAY 2015	04105152/3	$20.00
4-OUTPUT UNIVERSAL ADJUSTABLE REGULATOR	MAY 2015	18105151	$5.00
SIGNAL INJECTOR & TRACER	JUNE 2015	04106151	$7.50
PASSIVE RF PROBE	JUNE 2015	04106152	$2.50
SIGNAL INJECTOR & TRACER SHIELD	JUNE 2015	04106153	$5.00
BAD VIBES INFRASOUND SNOOPER	JUNE 2015	04104151	$5.00
CHAMPION + PRE-CHAMPION	JUNE 2015	01109121/2	$7. 50
DRIVEWAY MONITOR TRANSMITTER PCB	JULY 2015	15105151	$10.00
DRIVEWAY MONITOR RECEIVER PCB	JULY 2015	15105152	$5.00
MINI USB SWITCHMODE REGULATOR	JULY 2015	18107151	$2.50
VOLTAGE/RESISTANCE/CURRENT REFERENCE	AUG 2015	04108151	$2.50
LED PARTY STROBE MK2	AUG 2015	16101141	$7.50
ULTRA-LD MK4 200W AMPLIFIER MODULE	SEP 2015	01107151	$15.00
9-CHANNEL REMOTE CONTROL RECEIVER	SEP 2015	1510815	$15.00
MINI USB SWITCHMODE REGULATOR MK2	SEP 2015	18107152	$2.50
2-WAY PASSIVE LOUDSPEAKER CROSSOVER	OCT 2015	01205141	$20.00
ULTRA LD AMPLIFIER POWER SUPPLY	OCT 2015	01109111	$15.00
ARDUINO USB ELECTROCARDIOGRAPH	OCT 2015	07108151	$7.50
FINGERPRINT SCANNER – SET OF TWO PCBS	NOV 2015	03109151/2	$15.00
LOUDSPEAKER PROTECTOR	NOV 2015	01110151	$10.00
LED CLOCK	DEC 2015	19110151	$15.00
SPEECH TIMER	DEC 2015	19111151	$15.00
TURNTABLE STROBE	DEC 2015	04101161	$5.00
CALIBRATED TURNTABLE STROBOSCOPE ETCHED DISC	DEC 2015	04101162	$10.00
VALVE STEREO PREAMPLIFIER – PCB	JAN 2016	01101161	$15.00
VALVE STEREO PREAMPLIFIER – CASE PARTS	JAN 2016	01101162	$20.00
QUICKBRAKE BRAKE LIGHT SPEEDUP	JAN 2016	05102161	$15.00
SOLAR MPPT CHARGER & LIGHTING CONTROLLER	FEB/MAR 2016	16101161	$15.00
MICROMITE LCD BACKPACK, 2.4-INCH VERSION	FEB/MAR 2016	07102121	$7.50
MICROMITE LCD BACKPACK, 2.8-INCH VERSION	FEB/MAR 2016	07102122	$7.50
BATTERY CELL BALANCER	MAR 2016	11111151	$6.00
DELTA THROTTLE TIMER	MAR 2016	05102161	$15.00
MICROWAVE LEAKAGE DETECTOR	APR 2016	04103161	$5.00
FRIDGE/FREEZER ALARM	APR 2016	03104161	$5.00
ARDUINO MULTIFUNCTION MEASUREMENT	APR 2016	04116011/2	$15.00
PRECISION 50/60HZ TURNTABLE DRIVER	MAY 2016	04104161	$15.00
RASPBERRY PI TEMP SENSOR EXPANSION	MAY 2016	24104161	$5.00
100DB STEREO AUDIO LEVEL/VU METER	JUN 2016	01104161	$15.00
HOTEL SAFE ALARM	JUN 2016	03106161	$5.00
UNIVERSAL TEMPERATURE ALARM	JULY 2016	03105161	$5.00
BROWNOUT PROTECTOR MK2	JULY 2016	10107161	$10.00
8-DIGIT FREQUENCY METER	AUG 2016	04105161	$10.00
APPLIANCE ENERGY METER	AUG 2016	04116061	$15.00
MICROMITE PLUS EXPLORE 64	AUG 2016	07108161	$5.00
CYCLIC PUMP/MAINS TIMER	SEPT 2016	10108161/2	$10.00/pair
MICROMITE PLUS EXPLORE 100 (4 layer)	SEPT 2016	07109161	$20.00
AUTOMOTIVE FAULT DETECTOR	SEPT 2016	05109161	$10.00
MOSQUITO LURE	OCT 2016	25110161	$5.00
MICROPOWER LED FLASHER	OCT 2016	16109161	$5.00
MINI MICROPOWER LED FLASHER	OCT 2016	16109162	$2.50
NEW THIS MONTH			
50A BATTERY CHARGER CONTROLLER	NOV 2016	11111161	$10.00
PASSIVE LINE TO PHONO INPUT CONVERTER	NOV 2016	01111161	$5.00
MICROMITE PLUS LCD BACKPACK	NOV 2016	07110161	$7.50

LOOKING FOR TECHNICAL BOOKS? YOU'LL FIND THE COMPLETE LISTING OF ALL BOOKS AVAILABLE IN THE SILICON CHIP ONLINE BOOKSTORE – ON THE "BOOKS & DVDs" PAGES AT SILICONCHIP.COM.AU/SHOP

CIRCUIT NOTEBOOK

Interesting circuit ideas which we have checked but not built and tested. Contributions will be paid for at standard rates. All submissions should include full name, address & phone number.

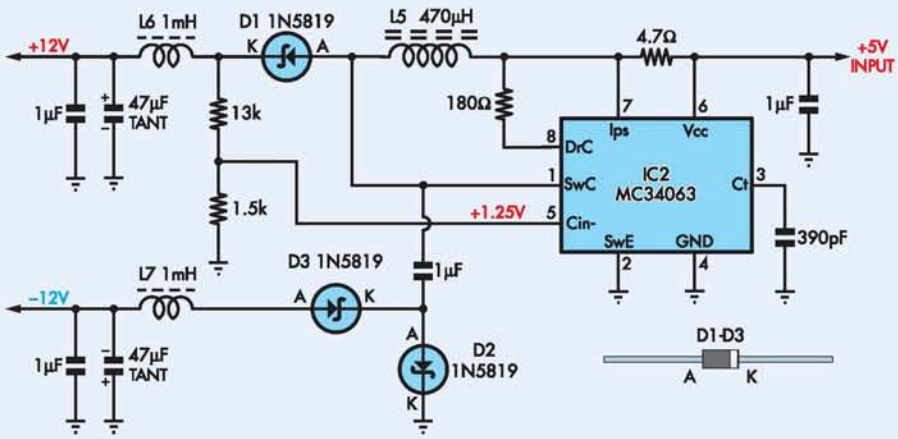

Simple split supply generator

This circuit shows how a simple boost regulator can be used to generate a split supply by adding just a few components. This example is based around the MC34063 and is derived from the improved SiDRADIO power supply published in Circuit Notebook, June 2014 (pages 80-81). However, virtually any boost circuit can be used in this way.

The +12V rail is generated from the +5V rail in the usual manner: IC2 briefly switches on an internal transistor between pins 1 and 2 (Switch Collector and Switch Emitter, respectively). This causes current to flow from the 5V supply through the 4.7Ω resistor, then inductor L5 and through IC2 to ground. This current flow charges L5's magnetic field.

When IC2's internal switch turns off, L5's magnetic field starts to collapse and as a result, the voltage at pin 1 of IC2 rises dramatically, forward-biasing Schottky diode D1 and charging the output capacitor filter bank via RF interference suppression inductor L6. The resulting voltage is well above the 5V input and depends on the duty cycle that IC2's internal switch operates at.

The voltage across the output capacitors is divided down by the 13kΩ and 1.5kΩ resistors to provide feedback to pin 5 of IC2, so it can regulate the output voltage to about 12V [1.25V x (13kΩ ÷ 1.5kΩ + 1)]. IC2 also senses the voltage across the 4.7Ω resistor and should this exceed 300mV, the internal switch is turned off, protecting the circuit against overload.

The extra components comprise a 1µF capacitor from pin 1 of IC2 to feed two more Schottky diodes. When the voltage at pin 1 shoots up, just after the internal switch is turned off, this capacitor charges up to 12V via D2. The next time IC2's internal switch turns on, pin 1 drops to 0V and so the bottom end of this added capacitor swings to -12V. This causes diode D3 to become forward-biased, charging the two output capacitors to a little less than -12V via L7.

There are a couple of provisos to this method of generating a split supply. First, the -12V output is likely to be a little lower than nominal, ie, around -11.7V.

Since IC2 must compensate for the forward voltage of D1 by driving pin 1 above +12V, this effectively cancels out the voltage loss for the negative rail generator in D2. However, D3 will also contribute a voltage drop of around 0.2-0.5V (depending on current draw) and so the negative output will be this much lower than the positive rail, assuming the load is connected across both rails. But note that most circuits requiring balanced rails do not require exactly the same voltage from each rail anyway.

If you need the rails to be better balanced, one simple solution is to replace D1 with a pair of series-connected Schottky diodes. This will reduce overall efficiency but IC2 will respond by increasing the voltage at pin 1 slightly and this will tend to cancel out the loss in voltage at the negative rail due to D3.

Regardless, the negative output as shown here is not regulated since IC2 has no feedback from this output. Also, note that op amps tend to be more sensitive to variations in the voltage at their negative rail than the positive rail, although this does vary from device to device (check the positive and negative CMRR curves in the respective data sheet).

A better solution is to change the feedback divider resistors to increase the output voltage by 0.5-2V and then fit a symmetrical pair of linear regulators, with worst-case drop-out voltages lower than the voltage increase you have provided, on both outputs. Using LDO regulators will let you minimise the extra voltage required, maximising efficiency.

Nicholas Vinen,
Silicon Chip.

Circuit Ideas Wanted

Got an interesting original circuit that you have cleverly devised? We need it and will pay good money to feature it in the Circuit Notebook pages. We can pay you by electronic funds transfer, cheque (what are they?) or direct to your PayPal account. Or you can use the funds to purchase anything from the Silicon Chip on-line shop, including PCBs and components, back issues, subscriptions or whatever. Email your circuit and descriptive text to editor@siliconchip.com.au

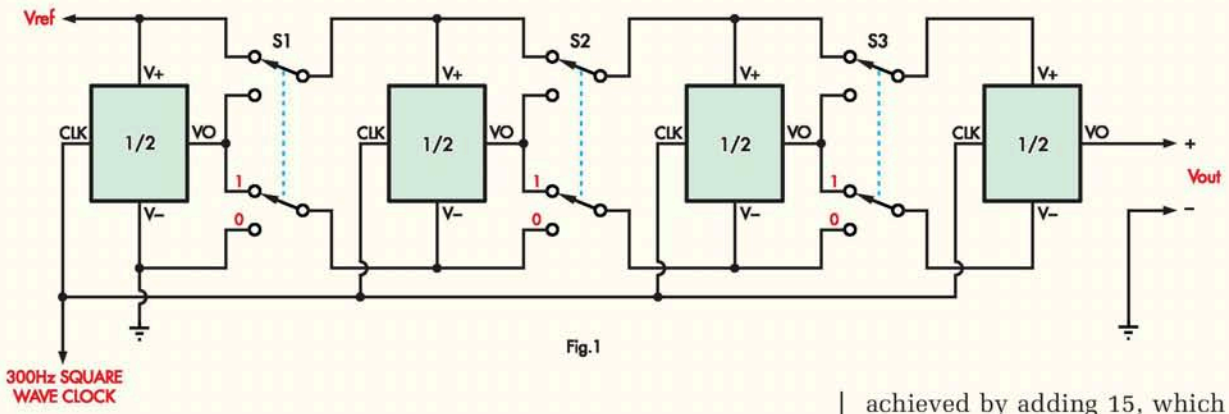

Fig.1

Precision switched capacitor DAC needs no precision components

This circuit demonstrates how you can build a precision DAC without needing precision components. The design presented is a "4.1-bit" DAC with some unique properties but it can be extended to more bits by simply replicating circuitry.

The basic principle is shown in Fig.1. The first block is a switched capacitor divider which accurately produces a voltage halfway between inputs V+ and V- at output VO. DPDT switch S1 feeds two of the outputs of the first block to the two inputs of the second block.

In one switch position, the upper and lower input voltages for the second stage are Vref and Vref/2, while in the other switch position, the two input voltages are Vref/2 and 0V. Each subsequent block then produces a voltage which is halfway between two of the outputs of the previous stage. This configuration is known as a Kelvin-Varley divider, although they are normally built using resistive dividers.

By controlling the positions of each switch, we can produce output voltages between Vref ÷ 2^n and Vref. In the case of a 4-bit DAC, this results in an output between 1/16th of Vref and Vref, which can vary in 15 steps. By adding a couple of extra switches, we can add the ability to produce an output of 0V, thus giving 17 different possible output voltages evenly spaced between GND and Vref, in steps of Vref ÷ 16.

The output of a typical R-2R ladder DAC does not go all the way up to Vref, so that's one advantage of this configuration.

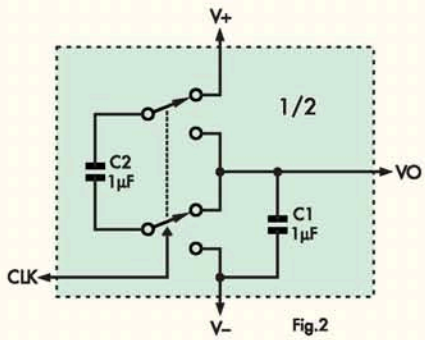

Fig.2

The detail of the capacitive divider blocks is shown in Fig.2. Essentially it's a type of charge pump. With the internal DPDT switch in the position shown, capacitors C1 and C2 are in series across voltage inputs V+ and V- and thus each charge up to roughly half the applied voltage, depending on their exact values.

In the alternative position, C1 and C2 are in parallel and so the voltage across them equalises, regardless of any slight difference in their values. Once their voltages stabilise, the only current flow is that needed to replenish their charge due to leakage or current drawn from the output (VO). Ideally, low-leakage capacitors should be used such as plastic film, although ceramic capacitors should also be suitable.

These building blocks are then combined to form the full example circuit, shown in Fig.3 (next page). A binary value between 0 and 16 (00000 to 10000) is applied to input pins 2-6 of CON2. This passes through flipflop IC11 (for reasons explained later) to IC8, a 4-bit binary adder that's used to subtract one from the applied value. This is achieved by adding 15, which has the same result as subtracting one for the lower four bits. The outputs of IC8 control a number of analog switch ICs to produce the desired output voltage.

A remarkable property of this configuration is that the voltage across each divider, and therefore across each capacitor in the dividers, is constant regardless of the digital input value. In other words, changing the digital input does not require any capacitors to charge or discharge. A further advantage of having constant voltages on the capacitors is that it is unnecessary to use capacitors having low dielectric absorption and very little current flows during operation, minimising error due to resistances.

Each switched capacitor building block is formed from two of the three SPDT stages of a MAX4053 triple analog switch IC. These ICs were chosen because they have a "break-before-make" characteristic and a very low charge injection of just 2pC (picocoulombs). This means that very little voltage is coupled from the control input through to any of the switch outputs during a switch transition.

An NE555 timer (IC1) is used to generate a ~2.4kHz square-wave. This is fed to 4-bit binary divider IC10a which reduces the frequency to 300Hz at its pin 5 output (QC), to drive the capacitive dividers. One advantage of dividing a higher frequency signal is that it ensures that the duty cycle is exactly 50%, while the output of the 555 may not be an exact square wave, although that isn't especially critical in this circuit.

Each divide-by-2 block is as shown in Fig.2 but implemented using the MAX4053 ICs. Two more

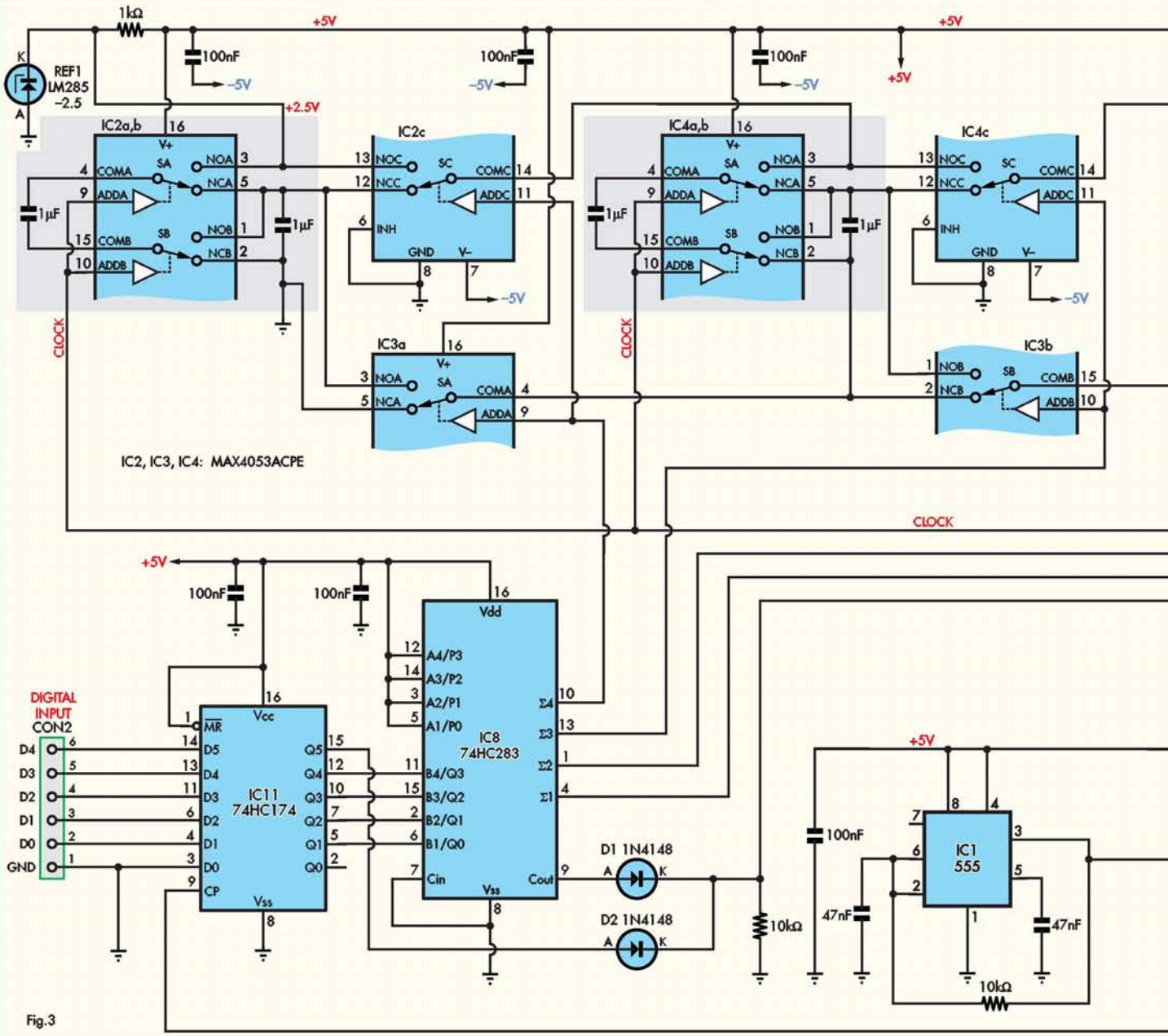

Fig.3

MAX4053 switches are used between the output of each block and the inputs of the next block, as depicted in Fig.1. Note that the two analog switches after the final block are arranged slightly differently.

The output of the DAC is fed to a sample-and-hold buffer in order to remove any glitches which may occur on clock edges (due to charge injection, crosstalk, etc). IC9a connects the DAC output to this buffer. Its logic input is driven high except for when the binary input value is zero, in which case it connects the buffer input to ground instead. This is necessary since the DAC, being built only from voltage dividers, could otherwise never produce a zero output.

For non-zero inputs, either the output of the final divider block or its positive input voltage is fed to the input of the sample-and-hold buffer, depending on the binary input value. The sample-and-hold buffer itself consists of a dual op amp and another analog switch, plus an RC filter.

When the logic control input of IC9b is high, the output of the first op amp buffer charges the 47nF capacitor up to its output voltage via a 100Ω resistor. This slows down any sudden transitions which may occur when the binary input value changes. Before the divider clock transitions low-to-high or high-to-low, IC9b is switched off and the 47nF capacitor at the pin 5 input of IC7b holds the last applied voltage until it switches on again later. This prevents glitches from getting through during the time that IC9b is off.

Op amp IC7 was selected since it has a low input offset voltage (ie, it's a precision op amp) and JFET or CMOS inputs. The JFET/CMOS inputs result in a low input bias

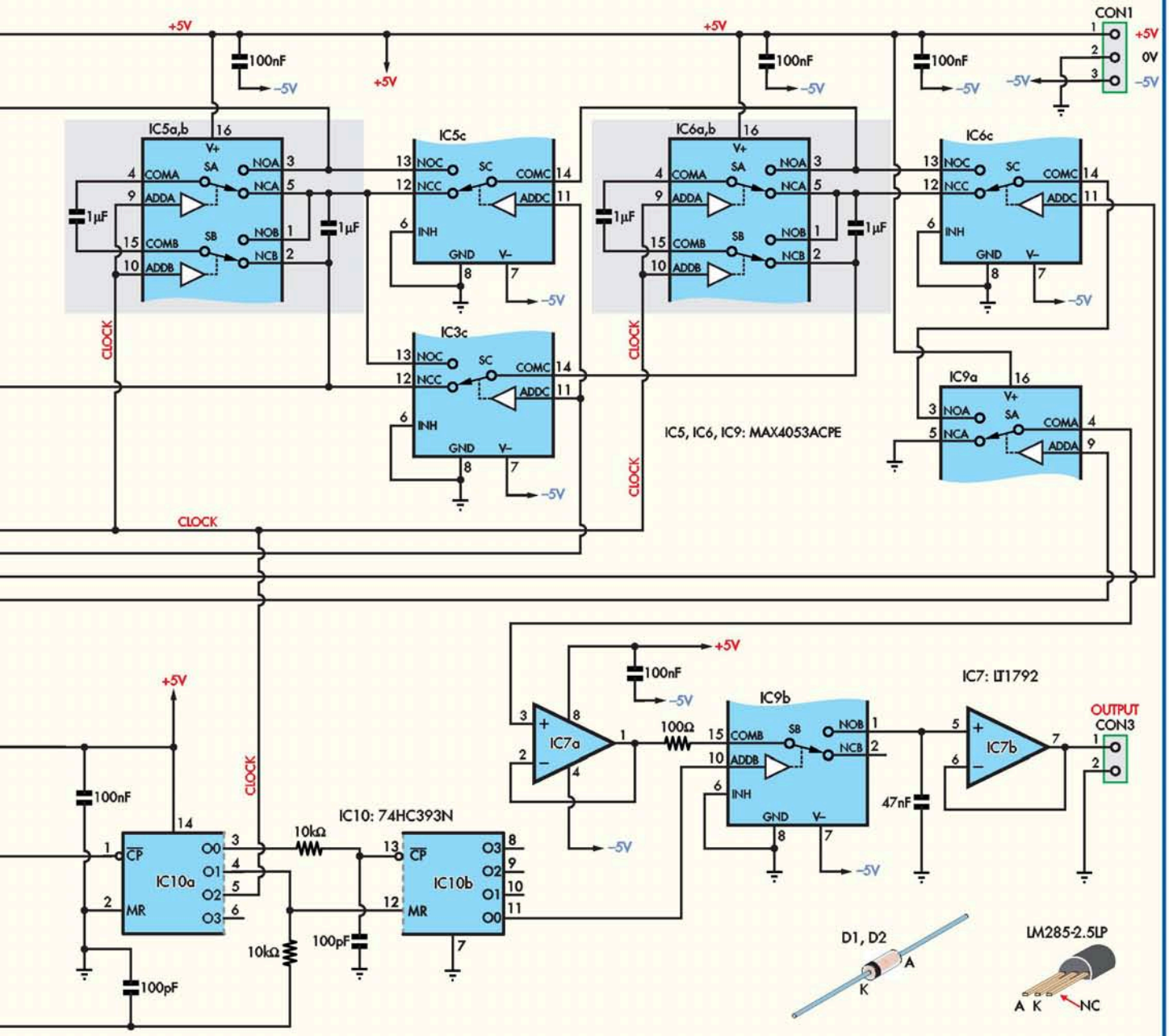

current which results in minimal current being drawn through the DAC capacitors and switches, thus minimising any error resulting from switch or wiring resistance.

This switching is managed by IC10b, the other 4-bit divider in the same package as IC10a. The 1.2kHz square-wave from pin 3 of IC10a is slightly delayed by an RC filter and applied to the pin 13 clock input of IC10b while its reset pin (pin 12) is driven directly from the 600Hz output at pin 4.

The result is that output pin 11 (QA) of IC10b goes high about 416µs after an edge transition on pin 5 of IC10a (ie, the clock to the dividers), remains high for about 416µs and then goes low again, well before the next edge transition.

The purpose of flipflop IC11 is to delay any changes in the input value until just after IC9b is switched off, so that any resulting glitches will not appear at the output. This is achieved with another short RC delay circuit between the CLR input of IC10b and the clock input of IC11 at pin 9.

Note that the circuit could be substantially simplified if a microcontroller is used, as the clock signal and sample-and-hold control signals could be generated from two synchronised PWM outputs and IC8, IC11, D1 & D2 could be eliminated by performing the subtraction and control logic in software. The micro could also ensure that the binary input value to the DAC does not change while the sample-and-hold buffer is active.

Note also that the number of bits can easily be extended by simply replicating divider stages.

Andrew Partridge,
Toowoomba, Qld. ($60)

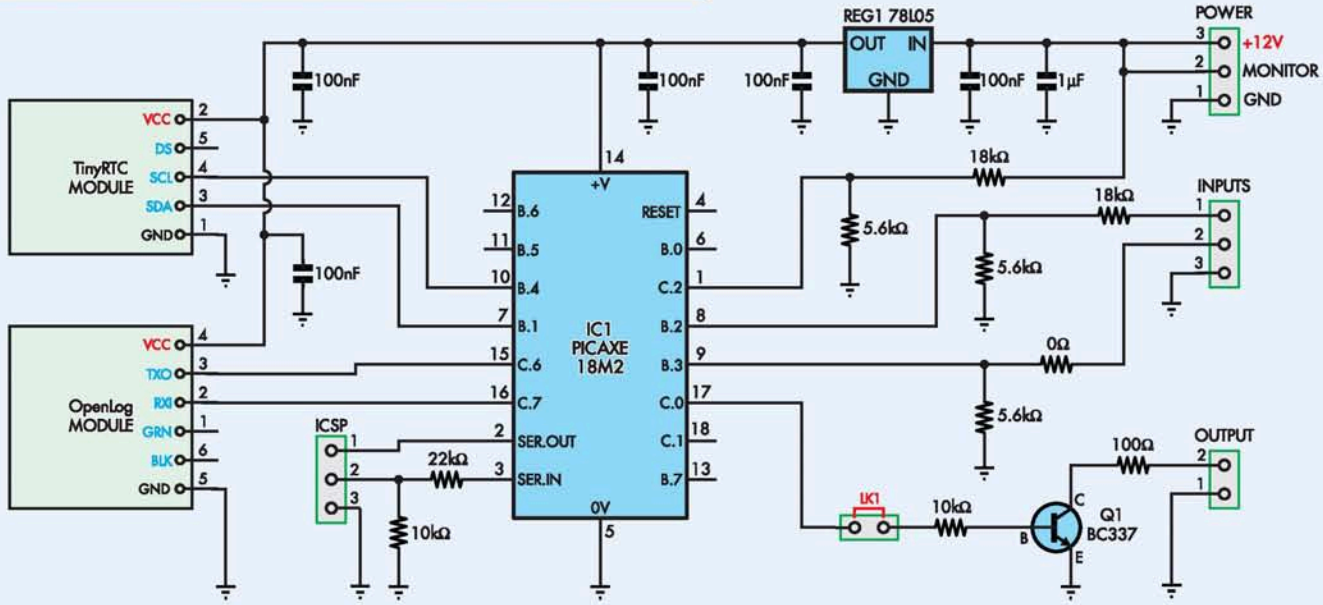

PICAXE-based data logger

This data logger is based on a PICAXE18M2, an OpenLog SD card interface and a TinyRTC real-time clock module and not much else. It was designed to log solar charger operation, ie, to track the voltage and current over time. The analog inputs can monitor 12V batteries/solar panels or similar (up to 20V) and the output of a buffered current sensor (up to 4.5V). Other voltage sources can be logged by changing the input divider resistors.

This logger is very simple to build and use, and has the following features:

- three analog inputs and one open-collector output (can be expanded);
- real-time clock with battery backup;
- logs to an SD card in human-readable format, including time/date stamp and input voltages;
- data can easily be opened in Excel or other spreadsheet software;
- logging interval adjustable from one second to several days;
- uses pre-assembled modules and can be built on a single-sided PCB;
- small form factor;
- low cost; and
- PICAXE software can be easily modified to suit specific needs

PICAXE18M2 microcontroller IC1 monitors the voltages at its ADC inputs (pins 1, 8 & 9) and the time/date is read from the TinyRTC module (with onboard DS1307 IC) via an I^2C serial bus on pins 7 & 10 of IC1 (SDA/SCL). It then writes the results to the SD card on the OpenLog module via a serial port on pins 16 & 15 (serial Tx & Rx). Having written a log entry, it then waits for a software-defined interval before repeating the cycle.

The OpenLog module manages the file system on the SD card, greatly simplifying the software for IC1. An open collector output from pin 17 is also provided for an alarm function.

When collected data is to be retrieved, the SD card is simply removed from the logger and connected to a PC via a card reader.

The BASIC source code, "logger-v3.bas", can be downloaded from the Silicon Chip website. This can then be loaded into IC1 via the in-circuit serial programming (ICSP) header shown on the circuit diagram, using a standard PICAXE programming cable.

Note that if you want to re-program the PIC later, you would need to start the PICAXE editor before powering up the circuit.

Note also that the default baud rate for the OpenLog module does not match the default baud rate for the PICAXE serial port. This is easily solved by placing a CONFIG.TXT file in the root directory of the SD card, telling the OpenLog module to operate at 2400 baud. A suitable file is supplied along with the BASIC source code download available from our website at www.siliconchip.com.au

George Mackiewicz, Vermont, Vic. ($50)

Issues Getting Dog-Eared?

Keep your copies of Silicon Chip safe with these handy binders

ONLY $16.95 inc GST PLUS P&P

Order now from www.siliconchip.com.au/Shop/4 or call (02) 9939 3295 and quote your credit card number or mail the handy order form in this issue.

**See website for overseas prices.*

SAD

Because you can't find that difficult-to-get special project part at your normal parts supplier. . .
Or perhaps they've discontinued the kit you really want to build. . .

HAPPY

To discover that the elusive bit that you want is stocked in the **SILICON CHIP ONLINE SHOP!**
There's a great range of semis, other active and passive components, BIG LEDs, PCBs, SMDs, cases, panels, programmed micros AND MUCH MORE that you may find hard to get elsewhere!

If it's been published in a recent SILICON CHIP project and your normal supplier doesn't stock it, chances are the SILICON CHIP ONLINE SHOP does!

HERE ARE JUST SOME EXAMPLES (oodles more on our website!)

Micromite Plus Explore 100 kit
Includes PCB, programmed 100-pin SMD micro, and all other non- optional onboard parts except LCD (Sept-Oct 2016) **$69.90**

Micromite Plus Explore 64 kit
Includes PCB, programmed 64-pin SMD micro, crystal, connectors and all other onboard parts (August 2016) **$30.00**

Micromite LCD BackPack kit
Includes PCB, 2.8-inch TFT touchscreen, programmed microcontroller, laser-cut case lid and other onboard parts (Feb 2016) **$65.00**

MCP1700 3.3V Low-dropout Regulator
3.3V LDO regulator in a convenient TO-92 package, as used in many projects; up to 6V input and 250mA output.....**$1.50**

GPS MODULE
Onboard antenna, 1pps output, operation to 10Hz, cable included
VK2828U7G5LF GPS/GLONASS **$25.00**

DS18B20 waterproof digital temperature sensor
Steel-encapsulated digital temperature sensor fitted with 1m lead.....**$5.00**

Micromite Parking Assistant
Ultrasonic distance sensor module and laser-cut UB5 jiffy box lid to suit (black or clear); interfaces with LCD BackPack kit (March 2016) **$7.50**

Stereo Valve Preamplifier
Hard-to-get parts: 3 x 39µF 400V capacitors, SMD inductor & shunt resistor **$20.00**
IPA60R520E6 600V logic-level Mosfet **$5.00**

High-Energy Electronic Ignition System / Jacob's Ladder (Nov 2012 / Feb 2013)
ISL9V5036P3 360V, 46A IGBT.....**$10.00**

DS3231-based RTCC module
Real-time clock & calendar module w/ 4KB EEPROM, I²C interface & mounting hardware
with LIR2032 cell **$7.50**
no cell **$5.00**

Low-Cost, Accurate Voltage / Resistance / Current Reference
all SMD Parts (2.5V or 1.8V version), including reference IC **$12.50**

Currawong stereo valve amplifier
Hard-to-get parts including 5 x 39µF 400V capacitors, HV transistors, regulator and blue LEDs **$50.00**

Isolated High-Voltage Probe
Pack of hard-to-get parts including HCNR201-050E linear optocoupler, op amps and HV capacitors & resistors.....**$35.00**

Multi-spark Cap. Discharge Ignition
Pack of hard-to-get parts for the CDI including transformer core, bobbin and clips, SMD ICs, Mosfets & HV capacitor **$50.00**

Mini 12V USB regulator
All SMD parts
With low battery cutout **$15.00**
Without low battery cutout **$10.00**

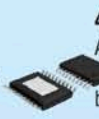

40V/5A Hybrid Switchmode Supply
All SMD parts including switchmode controller IC, inductor, Mosfets, Schottky diodes plus bobbin inductors.....**$50.00**

SiDRADIO parts
125MHz crystal oscillator, mixer, dual gate Mosfet, 5V relay and more.....**$20.00**
RF Coil Former pack.....**$5.00**

Classic DAC
Three hard-to-get ICs including CS8416 digital audio receiver, CS4398 DAC and PLL1708 clock generator plus crystal & blue LEDs **$45.00**

100dB Stereo 80 LED VU Meter
Described in the June 2016 issue.
PCB/programmed PIC .....**$15.00 ea**
All SMD parts **$20.00**
Laser-cut clear case pieces **$15.00**

Pack of 10 Ultra-bright SMD LEDs
Red/amber/yellow/green/blue; diffused lens
3216/1206 size **75c/10**
2012/0805 size **60c/10**

2.5GHz Frequency Counter
ERA-2SM+ Wideband MMC and ADCH-80A+ Wideband Choke.....**$15.00**
3 blue 4-digit 7-segment displays **$15.00**

Logic-level Mosfets
Pair of IPP230N06L3 N-channel **$5.00**
Or complementary pair of N & P-channel Mosfets (as used in Burp Charger) **$7.50**

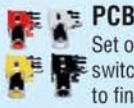

PCB mounting RCA sockets
Set of red, white, yellow and black matching, switched RCA sockets. White sockets are hard to find. Suits multiple projects **$5.00**

Bright blue LED with diffused lens
3mm lens, 25mm long leads **25c**
5mm lens, 25mm long leads **25c**
5mm lens, 15mm long leads **20c**

Pair of BSS83 dual-gate Mosfets
Dual-gate SMD Mosfets; discontinued with no direct replacement. Used in the Wideband Active Differential Probe (Sept 2014) **$4.00/pr**

MCP2200-I/SO
USB/Serial interface IC, as used in the Serial Interface project and the Deluxe GPS Timebase (April 2013/April 2014) **$7.50**

TCRT5000
Reflective Optical Sensor, as used in the Automatic Points Controller for model railways (March 2013).....**$2.50**

P&P (within Australia) on most items is fixed at $10.00 per order. The more you buy, the cheaper they become . . .

Don't forget: SILICON CHIP Subscribers qualify for a 10% discount on all these items!

YES! We also stock most SILICON CHIP project PCBs from 2010 and even earlier!

Log on now: www.siliconchip.com.au/shop

Review: Siglent SDS2104 4x100MHz 2GSs/s Mixed Signal Oscilloscope

By JIM ROWE

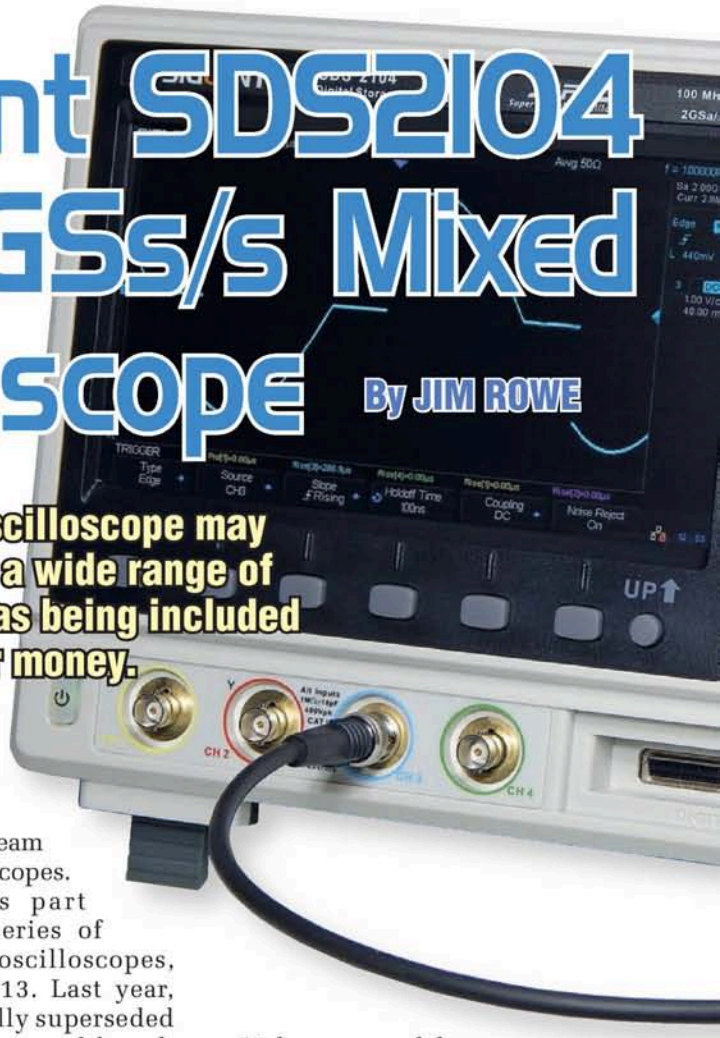

While Siglent's SDS2104 mixed-signal oscilloscope may not be their newest scope, it still offers a wide range of useful features. Now, with optional extras being included free of charge, it's exceptional value for money.

It wasn't that long ago that a basic two-channel 100MHz bandwidth digital oscilloscope sampling at no more than 500MSa/s would set you back more than $5000.

But that was when DSO technology was very new and the market was dominated by two big US firms. Since then the technology has galloped away and quite a few other firms have joined the market, many of them based in China.

Siglent started up in Shenzhen, China (near Hong Kong) in 2002, and launched their first ADS7000 DSO in late 2005. By 2007, these were selling in both the USA and Western Europe at the rate of 10,000 units per year. Since then, Siglent has been releasing a steady stream of high performance scopes.

The SDS2104 is part of their SDS2000 series of "Super Phosphor" oscilloscopes, launched in late 2013. Last year, this series was partially superseded by the SDS2000X series, although the differences between the two are not dramatic.

Models like the SDS2014 have continued to sell well, especially since some of the previously optional extras are now being included at no extra charge.

Scope 1: this rather busy screen grab shows all four analog channels measuring various different waveforms, with the eight digital channels also enabled. Details of the timebase and vertical settings are at the right edge of the screen.

It's because models like the SDS2014 offer such good value for money that we've chosen to review it here, rather than its newer equivalent, the SDS2014X (which carries a significantly higher price tag).

Main features

The Siglent SDS2000 series comes with an analog bandwidth of 70MHz, 100MHz, 200MHz or 300MHz with either two or four channels. So the SDS2014 with its four 100MHz channels is in the middle of the range.

Like all models in the series, the SDS2014 offers a maximum real-time sampling rate of 2GSa/s, although this only applies when a single channel is being used (the X series offers the full sampling rate regardless of the number of channels in use). The memory depth is quite impressive though, at 70Mpts (vs 140Mpts for the X series). It also boasts a fast signal capture rate of 110,000 waveforms/sec, while the X series offers 140,000 wfm/s.

Other key features of the SDS2014 include those associated with Siglent's Super Phosphor (SPO) technology: a

Key Features

- Four 100MHz channels
- Sample rate of 2GSa/s (single channel)
- Signal capture rate of 110,000 waveforms per second
- Memory depth of 70Mpts
- 8-inch 800x480 24-bit colour TFT-LCD display
- 256-level intensity grading waveform display
- 25MHz arbitrary waveform generator
- 8-channel logic analyser

256-level intensity grading waveform display plus a colour temperature waveform display. Both of these are designed to allow clearer identification of brief events as well as indicating the probability distribution of a displayed waveform.

There's a neat hardware-based zoom function (see Scope 3), which lets you zoom into any part of a captured waveform to examine and measure all of its details. It has a wide range of triggering options, including edge, slope, pulse, video (including HDTV), window, interval, dropout, runt and pattern triggering. There are also five serial trigger and decode functions, covering serial data protocols for I^2C, SPI, UART/RS232, CAN and LIN.

For automatic measurements on analog signals, there's a choice of 14 different voltage measurements, nine different time and duty cycle measurements and another nine inter-channel time delay measurements. It's also easy to make custom measurements using vertical and horizontal cursors.

There's a good selection of waveform "math" operations. As well as the usual addition, subtraction, multiplication and division it includes Fast Fourier Transform (FFT), differentiation, integration and square root. Cursor measurements can be used on any of these operations as well.

Other features of the basic SDS2000 series include a 200mm (8") diagonal TFT-LCD colour display with 800x480 pixel resolution, an English or Chinese user interface with a built-in help system and the ability to save set-ups, waveforms, screen images and CSV data files in either internal memory or on a USB thumb drive plugged into the instrument's front panel.

It also has the ability to print the screen image directly to a PictBridge compatible USB printer, plugged into the USB type-B socket on the rear panel.

Also on the rear panel is a LAN (VXI-11) socket for communication with a PC plus a pair of BNC sockets; one external trigger input and the other for either trigger output or Pass/Fail test result status. Incidentally, the SDS2104, like all of the other models in the SDS2000 series, responds to SCPI remote control commands fed to it via either a USB or LAN cable.

Other handy features include the ability to update the firmware, to do various self tests, to change the settings for the screen saver, to set the date and time for the built-in RTC and the ability to do self-calibration. While that covers the main features, there are extra "bonus" features.

Bonus features

First of all, there's the inbuilt 8-channel logic analyser. This works in conjunction with a logic sampling probe (SPL1008, currently bundled

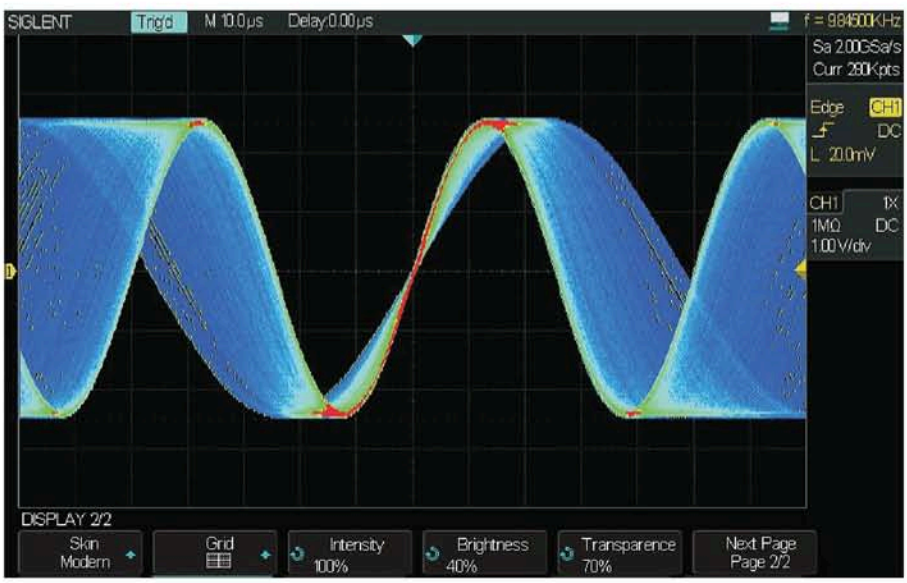

Scope 2: this heat map display of a frequency modulated sinewave shows how the scope captures thousands of waveforms per second and varies the pixel colour based on how many captured waveforms cross a given point.

Scope 3: this capture shows how the large amount of standard memory allows zooming into the waveform while still showing fine details of the signal.

Scope 4: here the I²C protocol decoding has been enabled; the clock and data signal traces are shown, along with the decoded hexadecimal data below and, in table form, above.

with the SDS2104), which plugs into a rectangular socket at the lower centre of the front panel and has nine flying input leads; eight signals plus earth. In comparison, the newer X-series models have an optional 16-channel MSO function, which needs a matching 16-channel probe (SPL1016).

Among the options available in MSO mode are the ability to set the triggering threshold to suit TTL, CMOS, LVCMOS3.3 and LVCMOS2.5 logic levels, plus a custom option to allow setting the threshold to anywhere between -3V and +3V. There are also a number of options regarding display of the digital channels. For example, when you have activated the serial trigger and decoding function, you can display each channel (or a group of channels) in terms of its decoded binary or hex value as well as its waveform (see Scope 4).

The sampling rate for the MSO digital channels is quoted as 500MHz, and the status sampling rate as 60MHz. The maximum data rate for a single channel is 120Mbps, while the pulse width resolution is 15ns.

In short, although the MSO function might have only eight channels, it should be quite useful for many common testing applications, especially when used together with the SDS2104's serial decoding functions.

The AWG/function generator

The arbitrary waveform and function generator provides a choice of nine different inbuilt waveforms: sinewave, square wave, ramp (triangular/rising or falling sawtooth), pulse, noise, cardiac, Gaussian pulse, exponential rise and exponential fall.

There's also a DC option which adjusts the offset applied to any of the previous functions, plus support for arbitrary waveforms to be loaded into the SDS2104 from a PC, using Siglent's EasyWave software. The same software can be used to create the waveform, either from scratch or by downloading an existing standard waveform from the SDS2104 and editing it as desired.

EasyWave can be downloaded from Siglent's US website (**www.siglentamerica.com**) but note that before it can be run you also have to download and install NI-VISA 15.0.1 from the National Instruments website at **www.ni.com/download/ni-visa-15.0.1/5693/en/** This provides the drivers necessary for USB (or LAN) communication with the SDS2104.

The waveform generator has only one output channel but its specs are quite impressive. The sampling rate is 125MSa/s, with a waveform length of 16K points and a vertical resolution of 14 bits. Maximum output frequency is 25MHz, with a frequency resolution of 1µHz. The output amplitude can be set to any level between 4mV and 6V peak-to-peak for a high impedance load, or from 2mV to 3V peak-to-peak for a 50Ω load.

When sinewave output is selected, the frequency can be set to anywhere between 1µHz and 25MHz. The upper frequency limit drops to 10MHz when you select a square wave or rectangular pulse, or to 5MHz if you select cardiac, Gaussian pulse or the exponential rise or fall waveforms. Selecting a ramp waveform makes it fall even further, to 300kHz.

It's worthwhile noting with respect to the square wave and pulse options that the duty cycle of the square wave output can be varied between 20% and 80%, with rise and fall times of less than 24ns. The pulse width can be adjusted between 48ns and 1ms, with a jitter level of 8ns.

So the built-in function and AWG generator with its 25MHz range and 14-bit vertical resolution should be very useful in a wide variety of testing applications.

Incidentally, Siglent have an op-

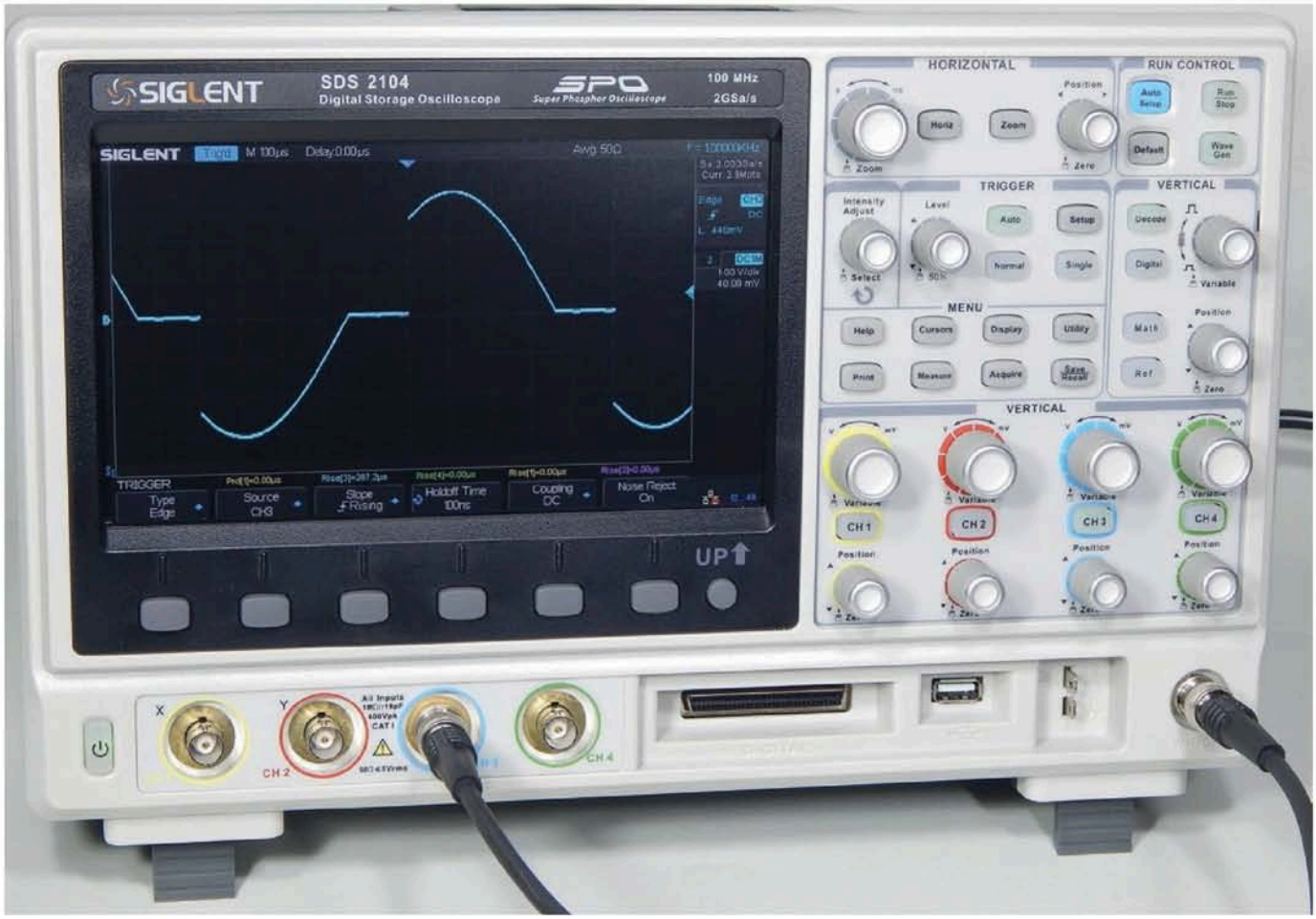

Front view: each channel has its own set of vertical controls while the remaining buttons are laid out in a clear and logical manner (in fact, quite similarly to our venerable Agilent scope). On the screen, you can see a chopped sinewave being produced from the internal arbitrary waveform generator, as described in the text.

tional SPA1010 wideband 10W amplifier which can be used to boost the output of the SDS2104's waveform generator as well as any of their other function/AWG generators. The SPA1010 has a rated -3dB bandwidth of 1MHz and can deliver 10W into an 8Ω load at any frequency between 500Hz and 200kHz.

This optional isolation module allows up to two channels to have independent ground references.

Power analysis

The final bonus feature currently bundled into the SDS2104 is a firmware module to perform Power Analysis of switchmode power supplies. This module can perform quite a few SMPS tests, including:

- seven tests at the AC line input (power factor, true power, apparent power, current harmonics, crest factor, inrush current and phase angle);
- three analysing the device itself (switching loss, di/dt and dv/dt slew rates);
- nine analysing the switching performance (average, RMS, period, frequency, positive and negative pulse width, duty cycle, rise and fall times);
- one testing output ripple;
- two measuring turn-on and turn-off times;
- one for transient response, and
- three for determining overall efficiency (Pout, Pin and Pout/Pin).

To make full use of this module, you need to acquire various external items, though. At the very least you'll need an isolating high-voltage probe, plus a current probe.

Siglent can provide a two-channel isolating HV probe with a bandwidth of 1MHz, powered from the DSO itself via the front-panel USB connector. They can also provide a wideband (40MHz) 30A AC/DC current probe, the CP5030, although this does cost about twice as much as the SDS2104 DSO itself.

There's also a Power Analysis Deskew Fixture (DF2001A), which can be used to compensate for any time delay difference between the voltage and current probes, to improve measurement accuracy.

What we found

Despite its high performance and generous 200mm-diagonal screen, the SDS2104 is fairly compact (352 x 224 x 112mm) and modest in weight

The rear panel carries the mains input socket, Kensington security lock, trigger in/out BNC connectors, USB host port and Ethernet interface, for remote control. The integrated carry handle and feet can also be seen. The trigger output can also be configured as a pass/fail output via the front panel user interface.

(3.6kg). It also appears to be sturdily built, which should augur well for reliability.

We tested the bandwidth of the four main analog input channels and they all proved to have an upper -3dB frequency above 116MHz, with one channel showing a figure of just over 140MHz. Very comfortably above the rated 100MHz, in other words.

We were very impressed with the wide range of trigger functions and waveform maths operations, and also the variable trace intensity/persistence and colour grading functions provided by Siglent's SPO technology.

We were impressed by the wide range of serial triggering and decoding options, and the way they enhance the mixed signal aspect of the SDS2104. It does take a while to get familiar enough with setting these options, but once you do it's easy to see that the instrument should be very handy for tracking down tricky problems involving I^2C, SPI, CAN or LIN data transactions.

The built-in waveform/function generator turned out to be easy to use, and we were impressed with the clean waveforms resulting from its 14-bit resolution. For many users, the function generator section may well provide all that is needed in terms of test signal generation up to 25MHz.

We're not sure how useful the AWG feature would be but we did try downloading and installing both NI-VISA and Easywave on a PC, and then downloading a sine waveform from the SDS2104 and changing it into a chopped waveform like that achieved by a Triac. That proved to be quite easy and when we then loaded the result back into the SDS2104's AWG, we could generate the chopped waveform in short order.

The Power Analysis feature is fairly specialised in application, coupled with the need to acquire various extra hardware items (some of them quite expensive) in order to put it to use. Still, for those who are involved in testing SMPSs it could make the SDS2104 particularly good value for money.

In summary, we found the Siglent SDS2104 100MHz DSO/MSO an excellent performer and exceptional value for money. It's currently available with all the above features for less than $1900 including GST. You can get it from Siglent's Australian distributor, Trio Test & Measurement Pty Ltd. For more details, visit **www.triotest.com.au** or e-mail **sales@triotest.com.au** Alternatively, phone them on 1300 853 407. SC

Subscribe to SILICON CHIP and you'll not only save money but we GUARANTEE you'll get your copy!

When you subscribe to SILICON CHIP (printed edition) in Australia, we GUARANTEE that you will never miss an issue.

Subscription copies are despatched in bulk at the beginning of the on-sale week (due on sale the last THURSDAY of the previous month). It is unusual for copies to go astray in the post but when we're mailing many thousands of copies, it is inevitable that Murphy may strike once or twice (and occasionally three and four times!).

So we make this promise to you: if you haven't received your SILICON CHIP (anywhere in Australia) by the end of the first week of the month of issue (ie, issue datelined "June" by, say, 7th June), send us an email and we'll post you a replacment copy in our next mailing (we mail out twice each week on Tuesday and Friday).

Send your email to: missing_copy@siliconchip.com.au

- ✔ Remember, it's cheaper to subscribe anyway . . . do the maths and see the saving!
- ✔ Remember, we pick up the postage charge – so you $ave even more!
- ✔ Remember, you don't have to remember! It's there every month in your letter box!
- ✔ Remember, your newsagent might have sold out – and you'll miss out!
- ✔ Remember, there's also an on-line version you can subscribe to if you're travelling.

Convinced? We hope so. And we make it particularly easy to take out a subscription - for a trial 6-month, a standard 12-month or even a giant 24-month sub with extra savings.

Here's how: simply go to our website (siliconchip.com.au/subs) – enter your details and pay via Paypal or EFT/Direct Deposit. You can order by mail with a cheque/money order, or we can accept either Visa or Mastercard (sorry, no Amex nor Diners').

If mailing, send to SILICON CHIP, PO Box 139, Collaroy NSW 2097, with your full details (don't forget your address and all credit card details including expiry!).

We're waiting to welcome you into the SILICON CHIP subscriber family!

Vintage Radio

By Ian Batty

The GE T2105 (front) is more compact than the Astor M5 radio described in September 2016 but it's still a good performer.

The incredible shrinking mantel set: GE's T2105

Are five transistors really that much better than four?

In September, we looked at Astor's M5 & M6 5-transistor sets. By sacrificing an IF amplifier stage, GE's T2105 model reduces the transistor count to just four but the set still offers good performance.

THIS GE T2105 4-transistor set appeared at an Historical Radio Society of Australia auction last year but I'd gone intending to keep my hands well in my pockets. After all, I really have to stop somewhere when it comes to acquiring vintage radios!

After the auction, the person who bought it told me about its 4-transistor design and regret set in with a vengeance. An offer to buy the set was politely declined but I was very pleased when he offered to lend me the set so that I could have a good look at it. I was curious to find out if it was really any good or just a cheap-and-cheerful import with mediocre performance.

The T2105 – first look

Despite having only four transistors, I soon discovered that the T2105 is able to take on five, six and 7-transistor sets for ordinary listening in the suburbs. It also works just fine at my country property near Castlemaine, pulling in both Melbourne ABC stations as well as any other set, along with a heap of country stations from all over Victoria.

Perhaps it's a good thing that it's going back to its owner in the near future. My Astor M6 was beginning to wonder if it had any future in my kitchen and was looking decidedly nervous as I examined this new kid on the block!

Circuit details

If we have to take a "man overboard" approach to radio receiver design, it's easiest to dump the more complex stages. This certainly was Regency's reasoning when, after starting with an 8-transistor design, they finally arrived at their 4-transistor TR-1 which was a big success.

GE seems to have had the same idea. Like the TR-1, the T2105 uses a self-excited converter, a single AGC-controlled IF stage, a diode demodulator/AGC rectifier and two audio stages with resistance-capacitance coupling and a Class-A output configuration.

Like the TR-1, the T2105 uses NPN transistors. However, unlike the TR-1, the T2105 uses silicon planar devices (as opposed to the TR-1's grown-junction devices).

Fig.1 shows the circuit details of the GE T2105. It specifies SE1001 (TO-18 package) transistors for the converter and IF stages, a BC209 audio driver stage and a 2N3563 (TO-5 package) for the Class-A audio output stage. However, the set shown in this article has unmarked transistors for the first three devices and these are in a stepped non-standard case that's similar to a TO-226 package. A 2N3568 transistor is used for the output stage, as specified on the circuit.

Another surprise was that the IF amplifier stage (TR2) uses a grounded base configuration which is rather strange. This configuration made sense in sets that used alloyed-junction germanium

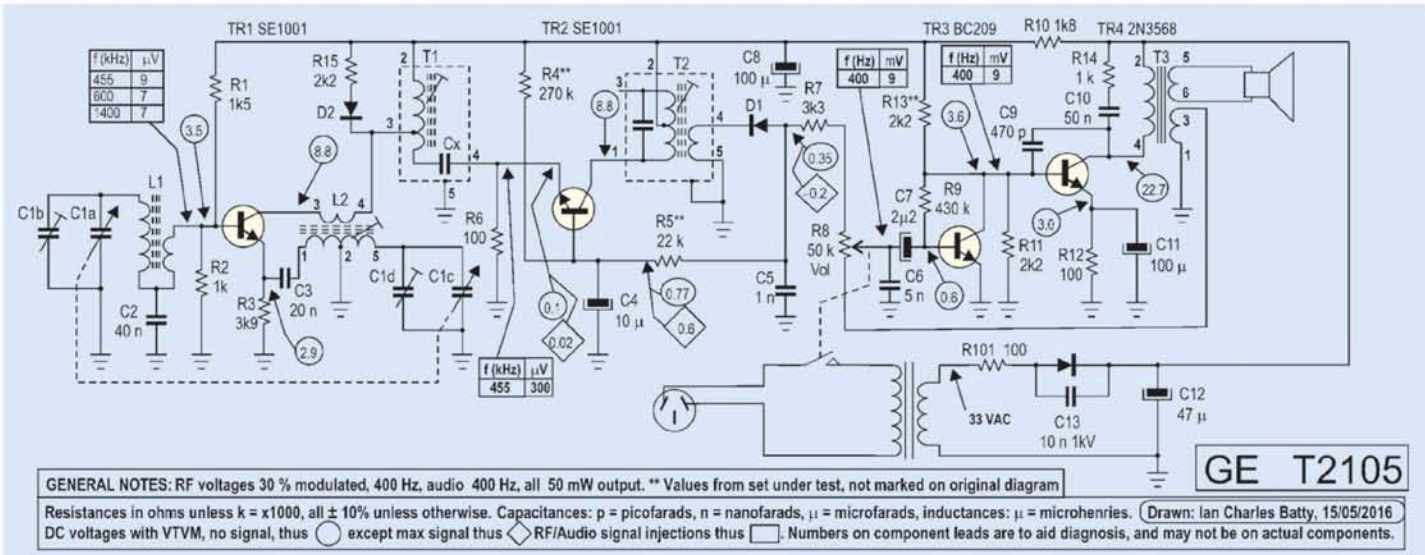

Fig.1: the GE T2105 is a 4-transistor design. TR1 functions as the converter, TR2 is an IF amplifier stage, diode D1 is the demodulator, TR3 is an audio driver stage and TR4 operates as a Class-A output stage. The set is mains-powered only and the power supply uses a power transformer to drive a half-wave rectifier and 47µF filter capacitor.

devices because it dispensed with the need for neutralising. However, silicon planar devices, as used in the T2105, have low feedback capacitances and so don't need neutralisation.

Looking at the circuit in greater detail, converter stage TR1 gets its base bias from divider resistors R1 & R2. This divider sets its base at around 3.5V and so its emitter sits at about 2.9V. Emitter resistor R3 limits the emitter current to around 0.75mA under DC conditions.

A final point about R1 & R2. Their values are quite low for a simple voltage divider but at the same time, they are also part of a divider network with resistor R10. This arrangement (in combination with the current drawn by the audio driver and RF/IF stages) ensures that the +24V supply is dropped down to the ~9V required to power the front end.

Is the LO operating?

As an aside, valve converters often derive their oscillator's anode supply via a dropping resistor. A large variation in the anode voltage from normal can indicate LO (local oscillator) failure and I recently used this fact to confirm this type fault in a friend's Eddystone set. By contrast, stopping the T2105's LO gives no significant change in the circuit voltages.

Basically, if you suspect that a transistorised LO is not operating, circuit voltages don't seem to be a useful indication.

As shown on Fig.1, TR1 uses collector-emitter feedback, resulting in less LO radiation back through the antenna rod. The output from the converter is fed via L2 to the first IF transformer which is an autotransformer, ie, with a tapped winding. This is similar to the scheme used in the Pye Jetliner (Silicon Chip, September 2014). IF amplifier stage TR2 is then fed from the first IF transformer's single winding via capacitor Cx.

Since the "top" of the IFT's winding (via pin 2) goes to the positive supply rail (and thus to IF ground), the IFT's "hot" end connects to the circuit via pin 4. Tuning for the IFT is achieved using Cx, which connects to TR2's emitter and then to IF ground via T2.

This makes TR2's emitter circuit part of the first IFT's tuned circuit and the low voltage/impedance tap provides optimal matching into TR2's low emitter impedance. Emitter resistor R6 (at 100Ω) provides a path for the DC emitter current to ground. The signal from T1 modulates this current and since the base voltage is essentially fixed, this varies the base-emitter voltage and thus the collector current.

Before leaving the front-end stages, let's consider the role of diode D2 and resistor R15. While such components are used purely to limit the LO's signal amplitude in some sets, in this set D2 & R15 are also part of the converter's collector load.

Disconnecting D2 confirmed its role in limiting very strong signals, well after the main AGC voltage had cut TR2's gain to almost unity. However, unlike the conventional AGC extension

Indicated RF Signal Levels & Gain

As noted in the article on the Astor M5 mantel set last month, all signal injection voltages shown on the circuit are as indicated by the generator's output controls. However, there is an issue with the GE T2105 concerning the accuracy of the indicated injection voltage into the emitter of IF amplifier TR2.

A quick calculation indicates an input impedance of some 20-30Ω at TR2's emitter and that's low enough to load down my 50-ohm generator so that the indicated value is artificially high. However, since most of us are simply going to connect a standard test lead (with a blocking capacitor) to the circuits we're testing, "uncompensated" readings are probably the most useful.

Some readers may be puzzled as to how a set amplifying a signal of about 10µV at the converter's base (TR1) can deliver a power output of around 50mW into the speaker. That represents a power gain of around about 110dB! However, if you allow a gain of around 27dB per stage and multiply that by four, it's easy to see how this figure is achieved. So why hadn't anyone done it before?

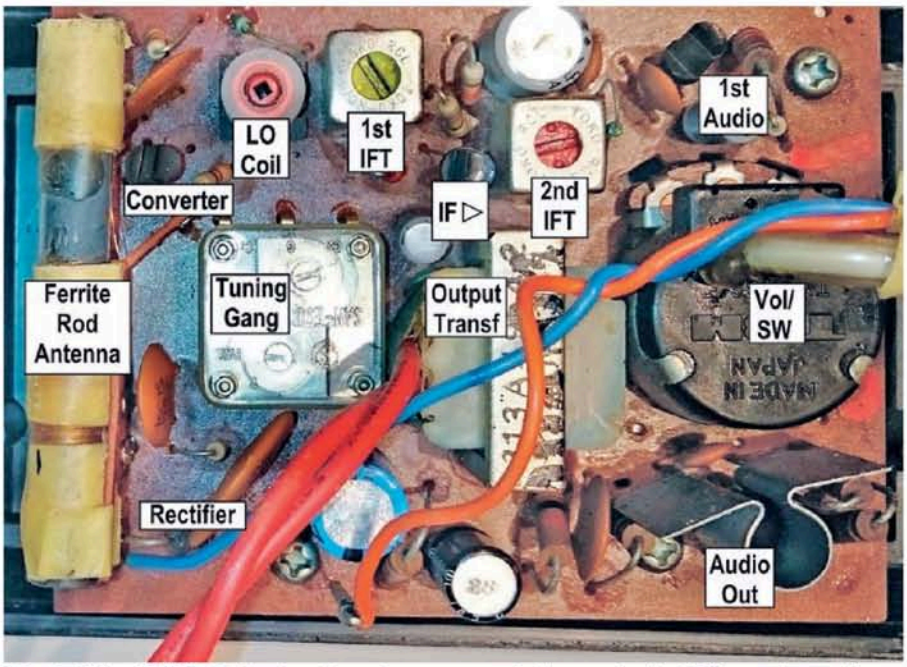

Most of the GE T2105's circuit parts are mounted on a single PCB, as shown in this labelled photo. Note the flag heatsink fitted to the audio output transistor at bottom right. The mains switch is on the back of the volume pot, directly above the output transistor.

diode used in (for example) the classic "Mullard" design, D2 acts a simple clamp diode. It does not rely on the first IF amplifier's change in collector voltage as the main AGC circuit comes into action.

As stated earlier, IF amplifier TR2 has a grounded base configuration and while a grounded-base stage's current gain is slightly less than one, its voltage gain can be considerable – more than for a common-emitter stage.

TR2 feeds the tuned primary winding of IF transformer T2 and its secondary in turn feeds demodulator diode D1. The recovered audio signal is then filtered and fed to the base of audio driver stage TR3 via volume control R8 and a 2.2µF coupling capacitor. TR3's collector then directly drives the base of TR4, the Class-A output stage.

This direct-coupled audio section saves on capacitors and output stage biasing components and is an unusual circuit. All other direct-coupled designs I've seen thus far use DC feedback around the output stage to stabilise the operating point. This means that temperature variations (or even transistor substitutions) have negligible effect on circuit operation.

By contrast, this circuit works by using quite a high value output emitter resistor (100Ω) to provide strong local negative DC feedback, with a 100µF bypass capacitor to ensure that the AC signal gain is still high. The driver stage based on TR3 is stabilised separately.

Let's take a closer look at TR3's biasing arrangement. This stage uses collector bias, with DC feedback from collector to base. While it's not as immune to temperature and component changes as combination bias, it works well enough for audio applications where the collector voltage changes with collector current.

Check The Mains Wiring Before Restoration

If you have one of these sets, note that the mains power is controlled by a switch on the back of the volume control potentiometer. This means that the leads running to this switch and the switch contacts operate at mains potential.

In addition, mains power is also present on a tagstrip that's held in a plastic cover attached to the speaker frame.

These mains connections were all adequately insulated on the set described here but it's something to watch out for. In fact, you should always check the insulation of all mains wiring and any associated connections before working on any mains-powered equipment.

TR3's collector load is also rather odd. As shown on Fig.1, this load consists of voltage divider R13 & R11 which also sets TR4's base voltage.

At first glance, this may appear to provide a low-impedance load for TR3, resulting in a low voltage gain. However, TR4's input impedance is only a few hundred ohms at most, so the parallel combination R11 & R13 is actually high enough to have little effect.

In short, it's a "cheeky" design that connects the driver's output straight into the output stage's bias divider.

As stated, TR4 operates as a Class-A amplifier stage. It dissipates some 600mW of power with no signal, which is quite a lot and so it's fitted with a flag heatsink to aid cooling. This transistor, a 2N3568, is also encapsulated in a ceramic-body, epoxy-topped TO-105 case.

TR4's collector drives output transformer T3 and its secondary in turn drives a 4-ohm loudspeaker. A second winding on the transformer provides feedback to the bottom end of the volume control, to reduce distortion.

The power supply is about as simple (and economical) as it gets and consists of a power transformer, a half-wave rectifier and a 47µF filter capacitor. Resistor R101 in series with the transformer's 33VAC secondary limits the surge current into the rectifier when power is first applied, while C13 filters any RF interference from the supply.

Why silicon transistors?

The first transistors were made using germanium rather than silicon. Germanium has a melting point of about 940°C and this made it easier to work with than silicon which melts at 1420°C.

Eventually though, germanium's scarcity and its high leakage current led to the adoption of silicon. This has several advantages, including significantly lower leakage currents, higher operating temperatures and much lower feedstock costs than germanium.

Silicon devices are also naturally better protected than germanium devices. Germanium dioxide is a soluble compound and so germanium devices require well-designed encapsulations and perfect (hermetic) seals to guarantee long lifetimes.

By contrast, a silicon dioxide surface (ie, glass) provides highly effective protection for silicon devices. This natural protection allows economic

encapsulations, even permitting the use of epoxy resins for many low-power audio and RF transistors (such as those used here) and industrial-grade ICs and microcontrollers.

Cleaning it up

As it came to me, the set was in quite good working condition. I simply cleaned the cabinet and sprayed the noisy volume-control pot with contact cleaner and that was it. The set was then ready for the test bench.

As an aside, I've not seen any other 4-transistor all-silicon designs from the mid 1960s. While Regency's TR-1 is also a 4-transistor set, any comparison between it and the GE T2105 would be unfair. Although only 12 calendar years separate the 1954 TR-1 from the 1966 T2105, we would be comparing a radio using first-generation grown-junction germanium devices against a set using fifth generation silicon planar devices.

How good is it?

GE's T2105 isn't in the same league as the 7-transistor Philips 198 from 1958 (Silicon Chip, June 2015) but it's still a creditable performer given its simplicity.

Its sensitivity (at 50mW output) is 300µV/m at 600kHz and 1400kHz and it achieves this figure with a 20dB signal-to-noise (S/N) ratio. This 20dB S/N ratio is a result of the set's comparatively low RF/IF gain, due to its use of a single IF amplifier stage (TR2).

The IF bandwidth was ±2.5kHz at -3dB. Testing at -60dB was impractical but it exhibited a bandwidth of some ±60kHz at -30dB, again due to its simplified IF channel.

Like most small sets, the T2105's audio performance is best described as "adequate". Its audio response from the volume control to the speaker is 200-2000Hz, while from the antenna to the speaker it's 200-1500Hz. The audio distortion at 50mW is 4% and is just 2.4% at 10mW out. As expected, the distortion rises to around 10% at the onset of clipping, at which point the set is delivering 180mW.

The set's audio output power is actually less than one-third of the power drawn by output transistor TR4. This is in line with other practical Class-A designs. It appears as though real-world Class-A output stages simply can't approach the theoretical maximum of 50% efficiency.

The set's sensitivity is also lower than would normally be expected. Based on other sets I've tested, the converter's sensitivity of some 7µV should translate into an "air sensitivity" of 70-100µV/m instead of the measured 300µV/m. The T2105's minuscule ferrite rod antenna is probably the culprit; it simply picks up less RF energy than the larger ferrite rod antennas used in bigger sets.

Despite this, I really do like it. Electrically, it's a good performer in all but the most demanding settings. I also like its cheap and cheerful design. Whoever put this set together was able to extract maximum performance with a minimum of complexity and some clever engineering. SC

Further Reading

(1) The original circuit (it was redrawn for this article) is on Kevin Chant's website at http://www.kevinchant.com/general-electric.html

(2) Photos of the set can be found on Ernst Erb's Radiomuseum website at http://www.radiomuseum.org/r/general_el_t2105a.html

Radio, Television & Hobbies: the COMPLETE archive on DVD

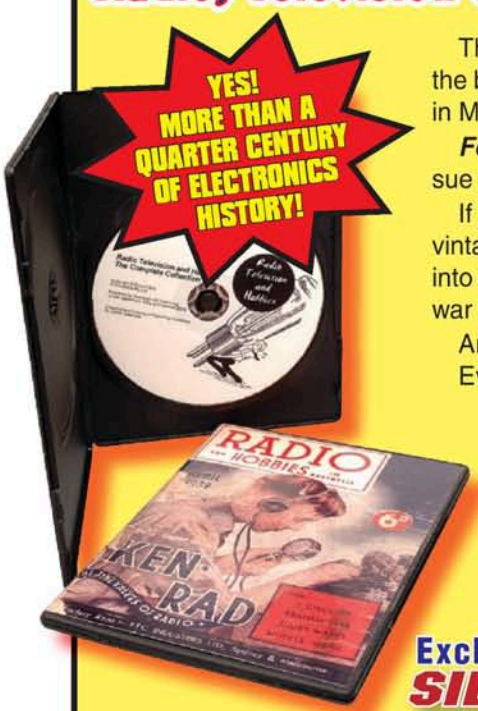

This remarkable collection of PDFs ***covers every issue*** of R & H, as it was known from the beginning (April 1939 – price sixpence!) right through to the final edition of R, TV & H in March 1965, before it disappeared forever with the change of name to EA.

For the first time ever, complete and in one handy DVD, every article and every issue is covered.

If you're an old timer (or even young timer!) into vintage radio, it doesn't get much more vintage than this. If you're a student of history, this archive gives an extraordinary insight into the amazing breakthroughs made in radio and electronics technology following the war years.

And speaking of the war years, R & H had some of the best propaganda imaginable!

Even if you're just an electronics dabbler, there's something here to interest you.

- **Every issue individually archived, by month and year**
- **Complete with index for each year**
- **A must-have for everyone interested in electronics**

ONLY $62.00 +$10.00 P&P

Exclusive to: SILICON CHIP

Order now from www.siliconchip.com.au/Shop/3 or call (02) 9939 3295 and quote your credit card number.

ASK SILICON CHIP

Got a technical problem? Can't understand a piece of jargon or some technical principle? Drop us a line and we'll answer your question. Send your email to silicon@siliconchip.com.au

Senator crossover and 12-inch driver option

I am in the process of building the Senator speakers using the September/October 2015 design with the enclosures been built by a cabinet maker friend out of 25mm MDF. My first question relates to the crossover. For the inductor, what wire diameter (or supplier model number) would you recommend? I couldn't find a figure in the magazines. I've already purchased the PCBs and bobbins from the SILICON CHIP store.

Secondly, just to add a little more fun to it I'd like your design thoughts on using the Celestion NTR12-3018D 12-inch driver in lieu of the specified 10-inch driver. Its specifications are similar to both the 10-inch used in the Senator and the 15-inch model used in the Majestic speakers. Is this do-able with the existing cross-over design?

My main concerns are the required changes to the enclosure. First up, taking into consideration I'm intending to use 25mm MDF, it would have to be wider (as the cut-out for the 12-inch driver is 286mm) but I'd like to limit the overall width to say 380mm (400 max), the depth to about 420mm and gain any extra volume required beyond this by increasing the height. I assume the reflector panel would also need to change in width, height and angle.

Finally, the horn model number you specified, Celestion T1534 is actually the T5134 (according to Celestion).

Keep up the great work and the enjoyment the projects and stories bring me since ceasing to be a hands-on aviation tech. (H. L., Melbourne, Vic.)

● We described winding the inductor in the June 2016 issue and you can use 18 or 20 gauge wire (0.95-1.27mm diameter). See www.siliconchip.com.au/Issue/2016/June/Budget+Senator+2-Way+Loudspeaker+System%2C+Pt.2

You can vary the volume of the enclosure as you propose but the angle of the internal reflector should be the same.

You cannot use a larger woofer and simply enlarge the enclosure and hope for good results. Ideally, the box needs to be redesigned using the Thiele-Small parameters of the 12-inch driver and the port length adjusted to give correct tuning.

Ultra-LD Mk.4 trouble-shooting

I have one of my Ultra LD Mk.4 Amplifier modules fully tested and running perfectly but the other one has been baffling me for three weeks. When doing initial testing of this module (no fuses and 68Ω safety resistors in series with the supply connections), I had to increase the safety resistors to 680Ω to reduce the current drain.

All on-board LEDs light-up as they should. The voltage drop across the 680Ω resistors and the ±57V rails indicates a current draw of ~50mA. Where your circuit indicates that there should be 600mV across the 68Ω emitter resistor for Q5, I measure 3.4V. The base-emitter voltages for Q3a, Q3b and Q5 are all around 0.65V, as I would expect.

Why isn't the Q5 current being decreased as described in the article? The base-emitter voltages indicate that both Q3a and Q3b are switched on. Under high magnification my SMD soldering wouldn't win any prizes but there are no obvious shorts or dry joints. Are there any suggestions you can give me? (D. H., Sorrento, WA.)

● It looks like there is an open circuit between the collector of Q3b and the base of Q5. It's also possible that Q3b is faulty, although a soldering problem is more likely.

Your measurements indicate that there should be nearly 3V across the 2.2kΩ resistor between Q3b's emitter and base so it certainly should be switching on but the current from its collector apparently is not pulling Q5's base up. Check the resistance across the two 6.2kΩ resistors, with the power off, just to be sure.

Sometimes it can look like a small

Can isolation transformer improve mains outlet safety

I would like to connect a General Purpose (mains) Outlet for use at the bench in a workshop, as safely as possible. I have available a mains rated 240VAC-240VAC transformer with both the primary and secondary rated at 8A. This could presumably support mains loads up to about 2KW as an "isolation transformer".

I also have a commercial Earth Leakage Detector RCD double outlet which "trips out" for loads greater than 10A or current imbalance/Earth leakage greater than 10mA.

It doesn't seem to make much sense to try and use both since if the mains is rendered "floating" by the isolating transformer, there will will be no current to Earth in a fault/shock situation.

Could you please indicate whether it would be better for me to use the isolation transformer or the RCD outlet in my workshop? (C. B., via email.)

● The two devices are used for different reasons. You should always use an RCD/circuit breaker for any mains equipment. It will protect you in case the appliance loses an Earth lead, breaks down to frame or develops any other fault which renders it dangerous to touch.

An isolation transformer is only required if you are repairing or testing a piece of equipment which needs to have its circuitry floating, ie, not Earthed in some way. As you point out, the RCD will not work if you are using an isolation transformer. So unless you have a specific reason for using an isolation transformer, don't.

We have a large isolating transformer in our laboratory but we use it very rarely.

part like the HN3A51F is soldered properly but a pin may be "floating" slightly above its pad. Add some flux and solder and reflow all the pins to make sure. Also double-check that Q3 is orientated correctly (unfortunately, the pinout is not rotationally symmetric) and make sure you haven't gotten the parts mixed up; Q3 should have a (very small) marking of "48" on top. You'll need a good light and magnifier to see this.

(Note: reflowing Q3's solder joints fixed the problem.)

Acceptable quiescent current for U-LD Mk.3

A few years ago, I contacted you about high quiescent current issues in my Ultra-LD Mk.2 amplifier. A few blown output transistors later you published an upgrade, the Mk.3. I eagerly did this to all eight Mk.2 modules I had!

My question concerns the ideal quiescent current setting, initially set to 9.5V across the safety resistors, then run for an hour or so with fuses in place and playing input source music. You mention to back off the setting to no more than about 15mV. Is this with no input at the time of adjustment? What would you consider to be the ideal setting? Is 6.7mV OK or is that too low? It sounds good to me at this setting, with no obvious distortion.

After having modified so many modules I also notice there is considerable variance in the stability of the quiescent current. Some tend to "hunt" around the setting more than others. Some are quite stable. If you have any suggestions as to a cure, that would be appreciated. (A. P., Sunshine, Vic.)

● Quiescent current should be measured with no input signal. When signal is present, the reading may be artificially high.

The ideal quiescent current is anywhere in the range of 7-10mV. 6.7mV is close enough and should be fine. The main thing to check is that the quiescent current doesn't increase too much over time as the amplifier heats up.

You are right that the Mk.3 design doesn't completely solve the thermal stability issue but it does work in the majority of cases. It depends upon how well all the various transistors are matched to each other.

Hunting is not a huge problem as long as it doesn't go too low or too high. Anything below say 3-4mV could compromise performance. Anything above about 15mV could indicate the possibility of thermal runaway and ultimately, output transistor destruction.

If it stays within the range of 5-15mV (with signal removed, after running for some time), we would consider that acceptable. Even if it goes outside this range briefly, it's probably OK but we'd immediately reduce the bias if it ever goes above 20mV.

We usually find the Mk.3 modules are either very stable (as our prototypes were) or their quiescent current may vary a bit but won't "run away" as long as the bias isn't turned up too high. If you're very unlucky you may build an amplifier that you can't stabilise, in which case we would try changing the BD139 transistor for one from a different batch. If that doesn't work, it may simply be that the output transistors are too mis-matched to stabilise and at least one will need to be swapped.

Cyclic Pump Timer regulator query

I am putting together the bits and pieces for the Cyclic Pump Timer project from the September 2016 issue. I note you require an LM2936-5.0 ultra-low quiescent current 5V regulator to provide V_{DD} for the microprocessor. The best match I can find is Jaycar ZV1653, which is an LM2936Z-5. But this is rated at only 50mA. Forgive my ignorance, but will this be sufficient current? (M. C., Lady Barron, Tas.)

● Yes the 50mA rating for the LM2936 regulator specified for the Cyclic Pump Timer is more than adequate. We expect the current drawn from the regulator to be well under 20mA (140mW power dissipation) when powering all items such as Q1, LED1 and LED2 and IC1. The relay itself draws power from the 12V supply and not from the LM2936 5V regulator.

A Brownout Protector for the whole house

The Brownout Protector in the June 2016 issue of SILICON CHIP is a useful circuit for protecting induction motors but you need one Protector for each appliance. As an alternative to building multiple units, why not wire just one Protector into the switchboard of a dwelling to protect many circuits rather than a single appliance?

Of course, the wiring, circuit breaker and contactor would have to be installed by a licensed electrician but the cost of installation should be less than building multiple units. If you are a licensed electrician, the installation will be much cheaper.

Installing the unit this way has advantages and disadvantages. The advantages are that only one Brownout Protector is required to protect all motors in the dwelling.

The unit will also protect other

Vintage radio capacitor confusion

I like reading the Vintage Radio section of SILICON CHIP and the one in the July issue was great but I have one question. It is in regard to the two 1µF filter capacitors in the Grebe set. The circuit diagram on page 93 shows the two capacitors, one across the 90V B+ rail and the other across the C+ rail. This means that between the two capacitors there are three connections: ground, B+ rail and C+ rail.

However, on page 95, the photo and description shows the two capacitors wired in parallel. How can this be? Even if one of the internal metal strips is connected to the metal of the box case holding the capacitors, that only leaves one terminal on the box case to go to the two other rails.

And if there are two of these box cases, then the paralleled capacitors need to be 0.5µF to give a total of 1µF. With the arrangement shown in the photo, the total capacitance will be 2µF, not 1µF as required by the circuit. I hope you can clear up this mystery. (B. C., Macquarie Park, NSW.)

● The section in the article where it says "these two capacitors were enclosed in a single case" is incorrect. Earlier in the same paragraph, it states that there are "two box-shaped ... filter capacitors" in the set. It seems that each of these boxes contains two 0.5µF (or 0.47µF) capacitors in parallel.

The caption to the photo is also misleading.

Current-limited power supply questions

I want to buy a power supply. What is the advantage of a power supply with an adjustable current limit? Secondly, I have been looking at the PICAXE-based Bipolar Transistor Tester you published in your September 2016 Circuit Notebook section. What do I need to get the PICAXE chip up and running?

Also, I see that I will need circuit board design software to develop a PCB for that circuit. Can you tell me which software is suitable for the job? On this subject, do you still sell the PICAXE programming book you had advertised in your bookshop a few years ago? Also, in the September 2016 issue, you had modifications to the PIC programmer. Will these these changes allow me to use a 15V DC power supply instead of the 16V DC power source listed? (R. M., Auckland, NZ.)

● We'll answer your questions separately.

1) A power supply with an adjustable current limit is safer to use since you can set the current limit to a value slightly higher than the expected current draw of the circuit before switching on the load. If there's a fault in the circuit being powered, or in the connection, the voltage and current will be limited, giving you more time to switch it off before damage occurs. It can also be used as a basic current source in some applications where this is important (eg, testing high-power LEDs).

2) You need a PICAXE programming cable. These are available from Altronics (Cat Z6198) among other sources. You also need to install the PICAXE Editor on your PC. It can be downloaded from: www.picaxe.com/Software/

3) You could try EAGLE (www.cadsoft.de; see review in the October 2011 issue) or Circuit Maker (http://circuitmaker.com/). They are both free of charge, at least initially.

4) Sorry, we no longer sell books as demand dropped off considerably in the last few years. You can get that book at www.thenile.com.au/books/david-lincoln/programming-and-customizing-the-picaxe-microcontroller/9780071745543

5) You could get away with a 15V DC supply but only when the programming voltage is set to 11V (S2 closed). Note though that a 15V DC supply may deliver more than 16V anway, depending on how good its regulation is. You need to measure it. Also, you may find that a 15V DC supply works fine with the original circuit if you replace D1 with a 1N5819 or link it out entirely; if you link it out, be careful not to wire up the supply backwards!

appliances from under-voltage such as TV sets etc, as their switch mode power supplies will generally have to work harder to maintain their supply rails at a much lower mains voltage.

The disadvantage is that you would have no power points working during a brownout and computers will lose supply without warning at this time and unsaved work may be lost. This will not be a problem if you have a UPS unit or use a laptop.

Obviously, a dedicated supply would be needed for life support type equipment.

Basically, the Brownout Protector, contactor and associated wiring are permanently connected in the main switchboard and the Protector relay controls the coil of a contactor with the required number of contacts.

When the mains supply voltage is healthy, the Brownout Protector would energise the contactor coil via its relay closing the contacts and energising all protected circuits. Conversely, if there is a brownout condition, the contactor will be de-energised, disconnecting all protected circuits. (G. C., via email).

● Your concept is interesting but the Brownout Protector should probably only be used on specific circuits which power, say, the kitchen, laundry, aircon and pool pump.

As you point out, if a brownout occurs, you will lose all power on the protected circuits which could be a nuisance if you are using appliances like PCs or TVs which have switchmode power supplies which can easily operate down to below 100VAC.

Whether they are working "harder" under these conditions is a moot point since so many appliances are designed to run at 110V and 230V in any case. They may, in fact, have higher stresses at 230V than at 110V.

The specific appliances which need protection are those which have induction motors and these would include fridges, freezers, washing machines, dishwashers, air-conditioners and pool and spa pumps. However, many air-conditioners these days are inverter-powered and many washing machines have direct-drive brushless motors and you would assume that they have their own inbuilt under-voltage protection. Indeed, they may well continue to operate at fairly low mains voltages. In that case, why turn them off?

So we would prefer to see the concept used more selectively to only protect circuits which definitely have induction motor-powered appliances. Moreover, the cost of an electrician and electrical parts may be substantially more than the cost of several Brownout Protectors. In fact, the electrician may well refuse to do such an installation since the Brownout Protector is not an approved device.

Car AM radio reception is going downhill

The last two cars I have owned have had very poor AM radio reception (Renault Scenic and Kia Cerato). I have been driving since 1965 and used to be able to get good AM reception up to 200km from most AM stations.

Last week I was driving from Cooma to Canberra and wanted to listen to Radio National from Canberra on 846kHz. The reception was dreadful until I got within about 30km of Canberra. That station has a power of 10,000 watts and I believe is meant to serve a large area of the ACT and southern NSW.

I noticed that the antennas on these cars are really short at about 10cm; the old telescopic antennas extended to 1m or more. Is this the reason for the poor reception? Or are the receivers poorly designed? FM reception is better but is of course restricted to line of sight.

Is it possible to buy longer antennas to retrofit to modern vehicles? (T. G., via email.)

● We are not familiar with the radio reception in late model cars, even though the more up-market cars make a feature of large and powerful speaker systems. However, it seems as though AM radio reception is not a high priority and even CD players are being

SEE HOW TO USE IT IN SILICON CHIP JAN 2016
(or at siliconchip.com.au)

THIS CHART will become as indispensable as your multimeter!

- Huge A2 size (594 x 420mm)
- Printed on 200gsm photo paper
- Draw on with whiteboard markers (remove with damp cloth)
- Available flat or folded

SILICON CHIP .COM.AU

REACTANCE - INDUCTANCE - CAPACITANCE - FREQUENCY READY RECKONER

How good are you at remembering formulas? If you don't use them every day, you're going to forget them!

Things like inductive and capacitive reactance? Series and parallel L/C frequencies? High and low-pass filter frequencies?

This incredibly useful reactance, inductance, capacitance and frequency ready reckoner chart means you don't have to remember those formulas – simply project along the appropriate line until you come to the value required, then read off the answer on the next axis!

Here at SILICON CHIP, we find this the most incredibly useful chart ever – we use it all the time when designing or checking circuits.

In fact, it's so useful we decided our readers would love to get one, so we printed a small quantity – just for you!

And here it is: printed a whopping A2 size (that's 420mm wide and 594mm deep) on beautifully white photographic paper, ready to hang in your laboratory or workshop.

If you don't find it as useful as we do, we'll be amazed! In fact, we'll even give you a money-back guarantee if you don't!#

Order yours today – while stocks last. Your choice of: Supplied fold-free (mailed in a protective mailing tube); or folded to A4 size and sent in the normal post.

But hurry – you won't believe you have done without it!

#Must be returned post paid in original (ie, unmarked) condition.

Read the feature in January 2016 SILICON CHIP (or view online) to see just how useful this chart will be in your workshop or lab!

NOW AVAILABLE, DIRECT FROM www.siliconchip.com.au/shop:

Flat – (rolled) and posted in a secure mailing tube $20.00 ea inc GST & P&P*

Folded – and posted in a heavy A4 envelope $10.00 ea inc GST & P&P*

***READERS OUTSIDE AUSTRALIA:** Email us for a price mailed to your country (specify flat or folded).

ORDER YOURS TODAY – LIMITED QUANTITY AVAILABLE

Spectrum analyser for home-theatre system

I have been a reader for many years but it is my impression that many SILICON CHIP projects are too complicated and have little appeal for many readers. Which is why I think you should look at a more mainstream project to do with home theatre systems.

I am involved in cinemas and we use a spectrum analyser from Audiocontrol in the USA (www.audiocontrol.com) that we imported for several thousand dollars. Their spectrum analyser is a third octave unit with a graphic equaliser based on LEDs. SILICON CHIP could do a DIY version for a fraction of the cost and that would have a lot of appeal to many of your readers. (D. H., via email).

● Thanks for your suggestion about a spectrum analyser project. We have had a look at the specifications of the Audio Control SA-3052 and agree that it is a very impressive instrument. However we would not contemplate designing such a complex instrument, as it would be too expensive and complicated for most of our readers.

But there is a much cheaper approach. As much as you might think that a PC-based instrument might be too slow to do the same job, have a look at our article on the TrueRTA Real Time Spectrum Analyser, in the October 2011 issue – see www.siliconchip.com.au/Issue/2011/October/Measuring+Audio+Gear+Without+Spending+Big+Dollars

This set-up is capable of very good results and the equal of spectrum analysers costing thousands of dollars, although you do need a reasonably fast laptop to run the software.

This PC package can be used with our USB Stereo Recording & Playback Interface from the June 2011 issue – see www.siliconchip.com.au/Issue/2011/June/USB+Stereo+Recording+%2526+Playback+Interface

We can supply the PCB for this project from our on-line shop at www.siliconchip.com.au/Shop/8/770

Naturally it will require calibrated microphones. If you wanted to use condenser microphones with phantom power, we published an add-on circuit in the September 2011 issue. See www.siliconchip.com.au/Issue/2011/September/Phantom+Power+For+The+USB+Recording+Interface

Before we conclude, we had another article which could be of interest and it was directed at making precision measurements on loudspeakers, in the December 2011 issue – see www.siliconchip.com.au/Issue/2011/December/How+To+Do+Your+Own+Loudspeaker+Measurements

omitted these days, in favour of less satisfactory MP3 players.

It may be possible to fit a "proper" extendable whip antenna although that could turn out to be a difficult task.

Using the Energy Meter with a solar inverter

Could the Appliance Energy Meter project (August-October 2016) be used to measure the output of a solar power inverter, with the meter itself powered from mains? If technically possible, would it be best to have the power supply components (ie, varistor, EMI filter and AC-DC converter) in a separate box with the 5V output wired to the output side of the converter on the PCB (near CON11)?

Also, as the meter will measure up to 20A, could the 10A extension cord specified be changed to 15A? (T. H., Banks, ACT.)

● The first question is: is it a grid-tied inverter? If it is, then it is not possible to isolate its output from the 230VAC grid and therefore the Energy Meter cannot work in this situation. In any case, as far as we know, all grid-tied inverters have some sort of panel which displays their output although it is not accessible for logging purposes.

If it is not a grid-tied inverter then yes, it would be possible to modify the PCB to separate the AC power to run the Energy Meter from the power source being measured, as you have suggested. And the power cord and plug could be upgraded to 15A if you have a 15A circuit.

MPPT Solar Charger with small panels

Hi, can the MPPT Solar Charger project published in the February 2011 issue be used with 5W or 10W solar panels? (N. S., Bongaree, Qld.)

● The article states the supported panel size is 40-120W for 12V panels and 80-240W for 24V panels. We once tried this unit with a small solar panel (around 5W) and it didn't work; it wouldn't stay in bulk charge mode, even with a flat battery, presumably because the panel was too small.

Our Solar-Powered Lighting System project from the May and June 2010 issues works with a 12V 5W solar panel, provides an MPPT 3-stage charging function for a 12V battery and could be used as a standalone charger. We don't know if it would work with a 10W panel; the charging current may be too high.

Altronics used to sell a kit for that project (K6028) but it has now been discontinued. As such, while we don't currently have PCBs for this project in stock, we will be adding them in the near future.

Solar Alarm going off prematurely

Hi, I purchased a KC5494 kit from Jaycar to build the Solar Shed Alarm from your March 2010 edition. I have assembled it but the problem is that it goes off immediately after the exit delay. The kit has three jumpers on the board. I can't see the correctly positions from photos in the instructions Jaycar provided. Could you please advise the correct jumper positions and any other hints or suggestions so that I can get it working. (M. T., via email.)

● The alarm should not sound after the exit time has expired unless one of the alarm sensors is triggered when the timer expires. The jumpers on Link 1 to Link 3 select instant or delayed entry and do not affect the exit operation.

Check that pin 2 of IC2 is at 11.4V after the exit period. This input shouldn't go to 0V unless a sensor is triggered.

Beefier Ultrasonic Cleaner wanted

I want to build the Ultrasonic Cleaner, described in your August 2010 issue but I'm unsure about a few things. I need a six litre bath. Your design is

MARKET CENTRE

Cash in your surplus gear. Advertise it here in SILICON CHIP

FOR SALE

PCB MANUFACTURE: single to multi-layer. Bare board tested. One-offs to any quantity. 48 hour service. Artwork design. Excellent prices. Check out our specials: www.ldelectronics.com.au

LEDs, BRAND NAME and generic LEDs. Heatsinks, fans, LED drivers, power supplies, LED ribbon, kits, components, hardware, EL wire. www.led-sales.com.au

tronixlabs.com - Australia's best value for hobbyist and enthusiast electronics from adafruit, DFRobot, Freetronics, Raspberry Pi, Genuino and more, with same-day shipping.

PCBs & Micros: SILICON CHIP Publications can supply PCBs, programmed microcontrollers and other specialised parts for all recent projects. See our On-line Shop at www.siliconchip.com.au

PCBs MADE, ONE OR MANY. Any format, hobbyists welcome. Sesame Electronics Phone 0434 781 191.
sesame@sesame.com.au
www.sesame.com.au

KEEP YOUR COPIES OF SILICON CHIP AS GOOD AS THE DAY THEY WERE BORN!

A superb-looking *SILICON CHIP* binder will keep your magazines in pristine condition.

* Holds up to 14 issues
* Heavy duty vinyl
* Easy wire inserts

ORDER NOW AT
www.siliconchip.com.au/shop

Where do you get those HARD-TO-GET PARTS?

Where possible, the SILICON CHIP On-Line Shop stocks hard-to-get project parts, along with PCBs, programmed micros, panels and all the other bits and pieces to enable you to complete your SILICON CHIP project.

SILICON CHIP ON-LINE SHOP
www.siliconchip.com.au/shop

KIT ASSEMBLY & REPAIR

KEITH RIPPON KIT ASSEMBLY & REPAIR:
* Australia & New Zealand;
* Small production runs.
Phone Keith 0409 662 794.
keith.rippon@gmail.com

VINTAGE RADIO REPAIRS: electrical mechanical fitter with 36 years experience and extensive knowledge of valve and transistor radios. Professional and reliable repairs. All workmanship guaranteed. $10 inspection fee plus charges for parts and labour as required. Labour fees $35 p/h. Pensioner discounts available on application. Contact Alan on 0425 122 415 or email bigalradioshack@gmail.com

DAVE THOMPSON (the Serviceman from SILICON CHIP) is available to help you with kit assembly, project troubleshooting, general electronics and custom design work. No job too small. Based in Christchurch, NZ but service available Australia/NZ wide. Email dave@davethompson.co.nz

ADVERTISING IN MARKET CENTRE

Classified Ad Rates: $32.00 for up to 20 words plus 95 cents for each additional word. Display ads in Market Centre (minimum 2cm deep, maximum 10cm deep): $82.50 per column centimetre per insertion. All prices include GST.
Closing date: 5 weeks prior to month of sale. To book, email the text to silicon@siliconchip.com.au and include your name, address & credit card details, or phone Glyn (02) 9939 3295 or 0431 792 293.

Ask SILICON CHIP

. . . continued from page 102

only good for 35W and around one litre of fluid. I'm looking for more or less 200W of transducer power. I'm going to clean mostly automotive (and motorcycle) parts, varying from really fragile injectors to the housing of an alternator which can take more power.

Is there a way to modify the PCB to drive at least a 50W transducer? I was planning to use a large heatsink on the Mosfets and perhaps install a cooling fan. If 100W is achievable, I could build two PCBs to drive four 50W transducers.

I also see the transformer has to be wound yourself. I would like to buy a complete suitable transformer because winding is a bit out of my league still. Which transformer can I use? The last question: would be if it is possible to regulate the power output so I can also clean more fragile components? I hope you can give me some advice. (S. L., Almere, Netherlands.)

● The Ultrasonic Cleaner does already drive a 50W transducer. If you want 200W then you would need four 50W transducers and four separate Ultrasonic cleaners. The design does have two settings. The higher power setting does run the Mosfets and transformer hotter.

The transformer can be obtained prewound if you use the transformer

. . . continued on page 104

Notes & Errata

4-Input Automotive Fault Detector, September 2016: the 3-way screw terminal blocks that make up CON1 have 5mm pin spacing, not 6mm as stated in the parts list.

Circuit Notebook, dsPIC/PIC programmer improvements, September 2016: The modification made to the circuit does not fully protect Q1 from excessive negative input signals. The circuit has been changed to include a 1N4148 diode (D2) in inverse parallel between the junction of Q1's base and the 1.5kΩ resistor.

Vintage Radio, September 2016: In Fig.3 bypass capacitor #22 was incorrectly labelled in the diagram as #23, and a 22Ω resistor (#48) was omitted between the junction of resistors #51 and #52.

Appliance Energy Meter, August-October 2016: it has been brought to our attention that the ACS712 isolated current monitor IC does not have a sufficiently high "Reinforced Isolation Voltage" rating to meet Australian/New Zealand safety standards for double-insulated equipment (AS/NZS 60950.1.2011), which this device effectively is.

The solution is to replace it with an ACS718KMATR-20B-T IC which has a different package and pinout but provides the same function. All constructors who have already received PCBs for this project will be sent an adaptor board, ACS718 IC and instructions describing how to fit the substitute device. Others who have ordered the PCB will either receive the original PCB plus the adaptor and IC or, eventually, a revised PCB with a footprint to suit the ACS718.

Compact 8-Digit Auto-Ranging Frequency Meter, August 2016: the firmware (0410516A.HEX) fails to initialise certain types of LCDs. The revised version, 0410516B.HEX, solves this. It can be download from the Silicon Chip website.

5-Element DAB+ Antenna, November 2015: the dimensions/drilling details shown in Fig.1 for the lower dipole elements have been slightly modified. The revised diagram is shown in the article on the Silicon Chip website. In addition, the 1.25-metre x 19mm square tubing for the boom should have a specified wall thickness of 1.2mm (not 1.8mm as shown in the parts list).

Ask Silicon Chip

. . . continued from page 103

that is supplied with the Jaycar kit for the Ultrasonic antifouling for boats (kit KC5498). The transformer and windings are the same for these two projects. Contact kits@jaycar.com.au regarding obtaining the prewound transformer. SC

Next Issue

The December 2016 issue is due on sale in newsagents by Thursday 24th November. Expect postal delivery of subscription copies in Australia between the 24th of November and the 9th of December.

Advertising Index

Aerospace & Defence Products 8
Allan Warren Electronics 103
Altronics .....loose insert
Digi-Key Electronics 3
Emona Instruments..... IBC
Front Panel Express..... 10
Glyn Ltd NZ..... 14
Hammond Manufacturing..... 41
Hare & Forbes..... 4-5
Jaycar IFC,49-56
KCS Trade Pty Ltd..... OBC
Keith Rippon Kit Assembly 103
LD Electronics..... 103
LEDsales..... 103
Microchip Technology..... 9,63
Mouser Electronics..... 7
Ocean Controls 12
PCB Cart..... 13
Rohde & Schwarz 11
Sesame Electronics 103
SC Radio & Hobbies DVD..... 97
SC Online Shop 80-81,87
Silicon Chip Binders..... 103
Silicon Chip Subscriptions..... 93
Silicon Chip Wallchart 101
Silvertone Electronics..... 10
Trio Test & Measurement..... 15
Tronixlabs..... 103

WARNING!

Silicon Chip magazine regularly describes projects which employ a mains power supply or produce high voltage. All such projects should be considered dangerous or even lethal if not used safely.

Readers are warned that high voltage wiring should be carried out according to the instructions in the articles. When working on these projects use extreme care to ensure that you do not accidentally come into contact with mains AC voltages or high voltage DC. If you are not confident about working with projects employing mains voltages or other high voltages, you are advised not to attempt work on them. Silicon Chip Publications Pty Ltd disclaims any liability for damages should anyone be killed or injured while working on a project or circuit described in any issue of Silicon Chip magazine.

Devices or circuits described in Silicon Chip may be covered by patents. Silicon Chip disclaims any liability for the infringement of such patents by the manufacturing or selling of any such equipment. Silicon Chip also disclaims any liability for projects which are used in such a way as to infringe relevant government regulations and by-laws.

Advertisers are warned that they are responsible for the content of all advertisements and that they must conform to the Competition & Consumer Act 2010 or as subsequently amended and to any governmental regulations which are applicable.

"Rigol Offer Australia's Best Value Test Instruments"

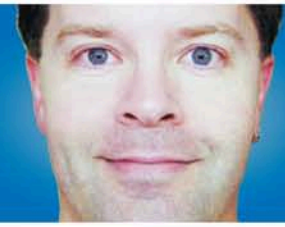

Oscilloscopes

RIGOL DS-1000E Series

- 50MHz & 100MHz, 2 Ch
- 1GS/s Real Time Sampling
- USB Device, USB Host & PictBridge

FROM $469 ex GST

NEW RIGOL DS-1000Z Series

- 50MHz, 70MHz & 100MHz, 4 Ch
- 1GS/s Real Time Sampling
- 12Mpts Standard Memory Depth

FROM $579 ex GST

RIGOL DS-2000A Series

- 70MHz, 100MHz & 200MHz, 2 Ch
- 2GS/s Real Time Sampling
- 14Mpts Standard Memory Depth

FROM $1,247 ex GST

Function/Arbitrary Function Generators

RIGOL DG-1022

- 20MHz Maximum Output Frequency
- 2 Output Channels
- USB Device & USB Host

ONLY $539 ex GST

NEW RIGOL DG-1000Z Series

- 30MHz & 60MHz
- 2 Output Channels
- 160 In-Built Waveforms

FROM $971 ex GST

RIGOL DG-4000 Series

- 60MHz, 100MHz & 160MHz
- 2 Output Channels
- Large 7 inch Display

FROM $1,313 ex GST

Spectrum Analysers

RIGOL DSA-800 Series

- 9kHz to 1.5GHz, 3.2GHz & 7.5GHz
- RBW settable down to 10 Hz
- Optional Tracking Generator

FROM $1,869 ex GST

Power Supply

RIGOL DP-832

- Triple Output 30V/3A & 5V/3A
- Large 3.5 inch TFT Display
- USB Device, USB Host, LAN & RS232

ONLY $649 ex GST

Multimeter

RIGOL DM-3058E

- 5 1/2 Digit
- 9 Functions
- USB & RS232

ONLY $673 ex GST

Buy on-line at www.emona.com.au/rigol

Sydney
Tel 02 9519 3933
Fax 02 9550 1378

Melbourne
Tel 03 9889 0427
Fax 03 9889 0715

Brisbane
Tel 07 3392 7170
Fax 07 3848 9046

Adelaide
Tel 08 8363 5733
Fax 08 83635799

Perth
Tel 08 9361 4200
Fax 08 9361 4300

EMONA

email testinst@emona.com.au

web www.emona.com.au

KCS TraceME

hello! TraceME LoRa™ Technology

VEHICLE TRACKING

PERSONAL TRACKING

premium	high-end	mid-range	budget	budget	mid-range	mid-range	budget
TM186/R9A10	TM201/R9U10	TMR9B3/R9A10	TM178/R9H7	TM203/R9F4	TM189/R9P4	TM179/R9Q1	TM206/R9D5

and goodbye GPS?

OBJECT TRACKING

high-end	mid-range	mid-range	budget	budget	budget
OEM	OEM	OEM	OEM		
TM202/R9C7	TM202F/R9C5	TM230/R9M1	TM202B/R9C5	TM900/N1C1	TM901/N1C2

www.Trace.ME

All trademarks mentioned herein belong to their respective owners.